HOMER FIRE STATION #2
SKYLINE DRIVE

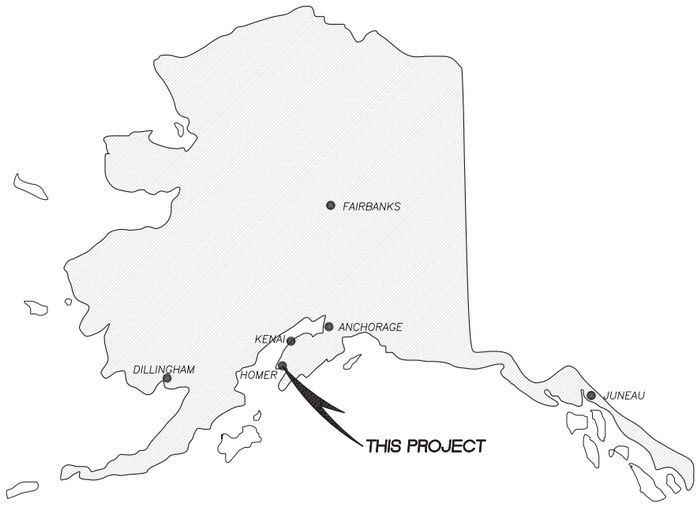

LOCATION MAP

LEGAL DESCRIPTION: T 6S R 13W SEC 7
SEWARD MERIDIAN HM
2011030 HILLSTRAND'S
HOMESTEAD LOT 2 THAT
PRTN OUTSIDE CITY LIMITS

2009 IBC CODE DATA	
OCCUPANCY GROUP	B, & S-1
CONSTRUCTION TYPE	V-B
ALLOWABLE AREA PER STORY	1 STORY - 9,000SF
NUMBER OF STORIES	2 ALLOWED
FIRST STORY AREA	2750 SF
MEZZANINE AREA	293 SF
FIRST FLOOR OCCUPANT LOAD	2457SF/300SF+293SF/100SF=12
STORAGE MEZZANINE OCCUPANT LOAD	293/300SF = 1
TOTAL OCCUPANT LOAD	13
FIRST FLOOR EXITS REQUIRED	1
STORAGE MEZZANINE EXITS REQUIRED	1
FIRST FLOOR EXITS PROVIDED	2
STORAGE MEZZANINE EXITS REQUIRED	1
FIRST FLOOR EXIT WIDTH REQUIRED	36 INCHES
MEZZANINE EXIT WIDTH REQ'D.	36 INCHES

CITY OF HOMER - ALASKA - MARCH 31, 1964

MAYOR
MARY E. (BETH) WYTHE

CITY MANAGER
WALT WREDE

PUBLIC WORKS DIRECTOR
CAREY S. MEYER, P.E.

CITY COUNCIL MEMBERS:
DAVID LEWIS
JAMES DOLMA
FRANCIE ROBERTS
BARBARA HOWARD
BRYAN ZAK
BEAUREGARD BURGESS

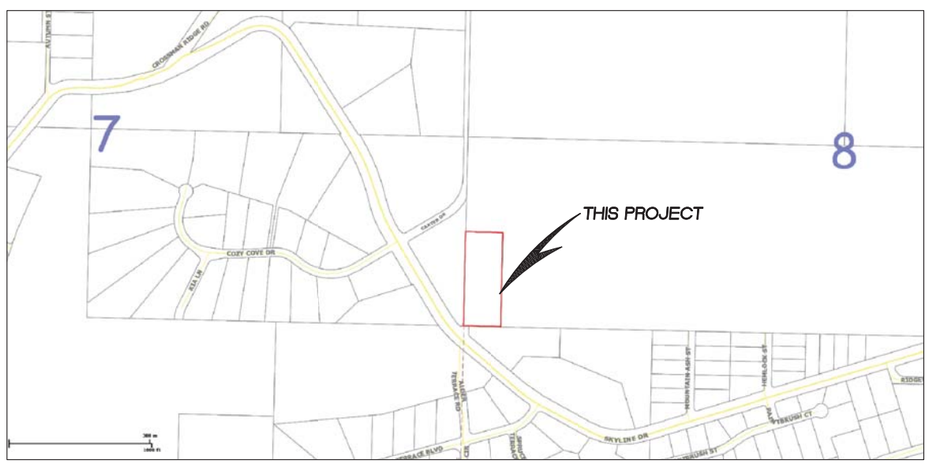

VICINITY MAP

INDEX TO DRAWINGS

STATE OF ALASKA 49TH
Wilson L. Nelson
Licensed Professional
01/15/14
Registered Professional

NO.	REVISION	DATE

CONSULTING ENGINEERS
STRUCTURAL/CIVIL
155 BIDARKA ST
KENAI, AK 99611
TEL. (907) 283 - 3583
NELSONENGINEER@ALASKA.NET
NELSON ENGINEERING

HOMER FIRE STATION #2 SKYLINE DRIVE
CITY OF HOMER
HOMER, AK
TITLE SHEET AND LOCATION MAP

PROJECT NO. 1359
DRAWN BY: CAM
CHECKED BY: WJN
DATE: 01/15/14
SCALES: NOTED
HORIZ. NOTED
VERT. NOTED
SHEET T1.1
TOTAL: 39

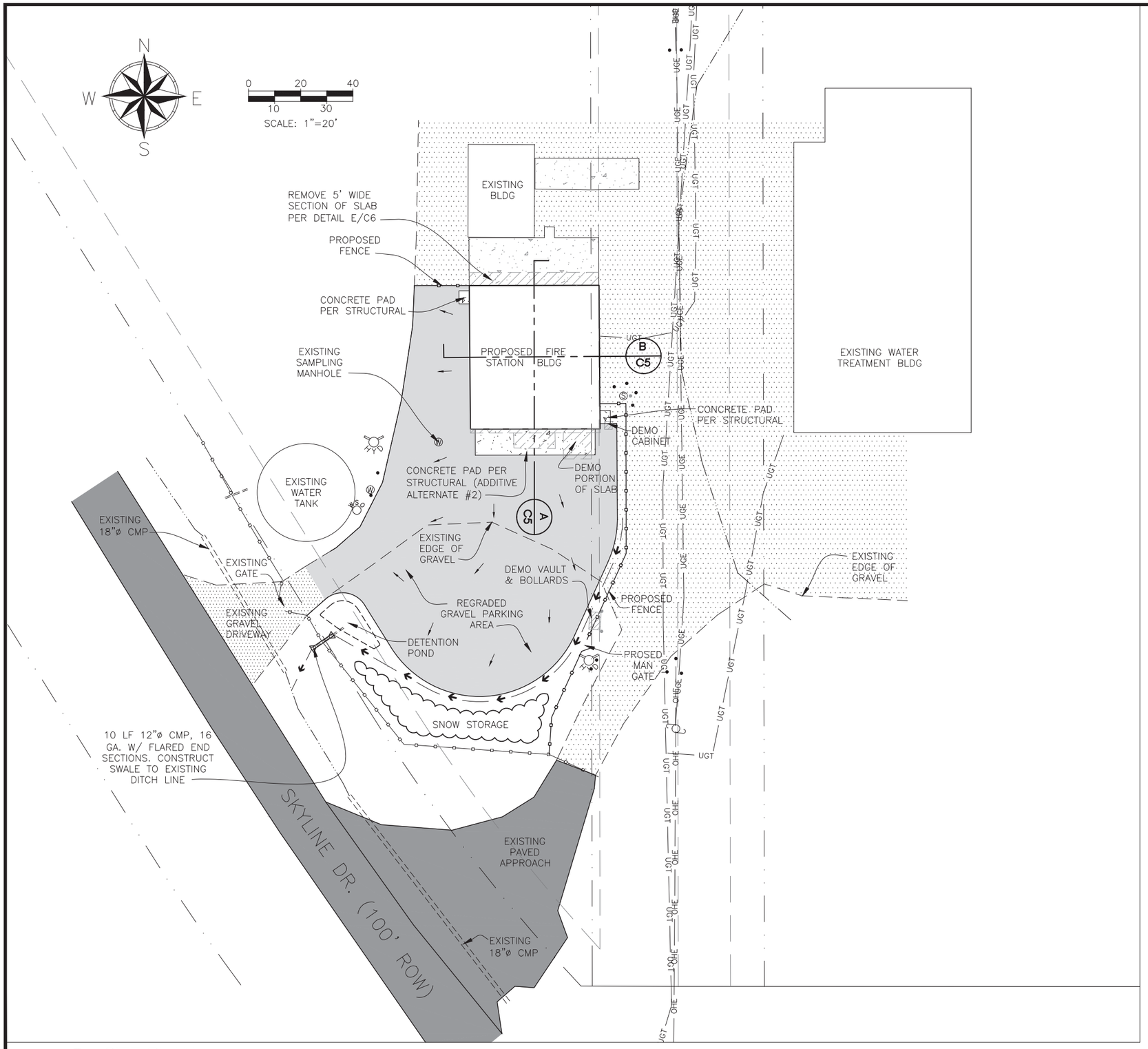

A C1 **SITE PLAN**

GRAPHIC SCALE: 1" = 20' (22X34), 1" = 40' (11X17)

GENERAL NOTES

1. PROPERTY SURVEY WAS PROVIDED BY ABILITY SURVEYS. THE CONTRACTOR IS RESPONSIBLE FOR DETERMINING THE EXACT LOCATION OF ALL SITE FEATURES. IF THE CONTRACTOR ENCOUNTERS CONDITIONS OTHER THAN THOSE SHOWN ON THE PLANS, HE SHALL IMMEDIATELY CONTACT THE ENGINEER FOR DIRECTIONS.
2. ALL CONSTRUCTION METHODS AND MATERIALS USED FOR THIS PROJECT SHALL CONFORM CITY OF HOMER STANDARD CONSTRUCTION SPECIFICATIONS, 2011 EDITION.
3. ALL WORK ON UTILITIES SHALL BE COORDINATED WITH CITY OF HOMER PUBLIC WORKS.
4. LOCATION OF UNDERGROUND UTILITIES ARE APPROXIMATE. ACTUAL DEPTH, NUMBER AND LOCATION UNKNOWN. BURIED UTILITIES OTHER THAN THOSE SHOWN ON THE PLANS MAY BE PRESENT. THE CONTRACTOR SHALL BE RESPONSIBLE FOR LOCATION, IDENTIFYING, AND WORKING AROUND ALL UTILITIES WITHIN THE PROJECT LIMITS AT NO ADDITIONAL COST TO THE OWNER. CALL FOR LOCATES PRIOR TO EXCAVATION.

LEGEND

EXISTING (E) PROPOSED (P)

- ASPHALT
- CONCRETE
- GRADED GRAVEL AREA
- GRAVEL
- REMOVE CONCRETE
- ASPHALT CUT LINE
- BUILDING LINE
- DITCH
- DRAINAGE SWALE
- EASEMENT
- EDGE OF CONCRETE
- EDGE OF GRAVEL
- EDGE OF PAVEMENT
- FENCE
- OHE — UTILITY – OVERHEAD ELECTRIC
- UGE — UTILITY – UNDERGROUND ELECTRIC
- UGT — UTILITY – UNDERGROUND TELEPHONE
- SS — UTILITY – SEWER LINE
- W — UTILITY – WATER LINE
- PROPERTY LINE
- SEWER MANHOLE
- WATER MANHOLE
- SNOW STORAGE
- HYDRANT
- WATER SERVICE VALVE

STATE OF ALASKA 49TH WILLIAM J. NELSON Registered Professional Engineer

NO.	REVISION	DATE

CONSULTING ENGINEERS
STRUCTURAL/CIVIL
155 BIDARKA ST
KENAI, AK 99611
TEL. (907) 283 - 3583
NELSONENGINEER@ALASKA.NET
NELSON ENGINEERING

HOMER FIRE STATION #2 SKYLINE DRIVE
CITY OF HOMER
HOMER, ALASKA
SITE PLAN

PROJECT NO. 1359
DRAWN BY: MZD
CHECKED BY: WJN
DATE: 01/15/2014
SCALES: NOTED
HORIZ. NOTED
VERT. NOTED
SHEET: C1
1 OF 8

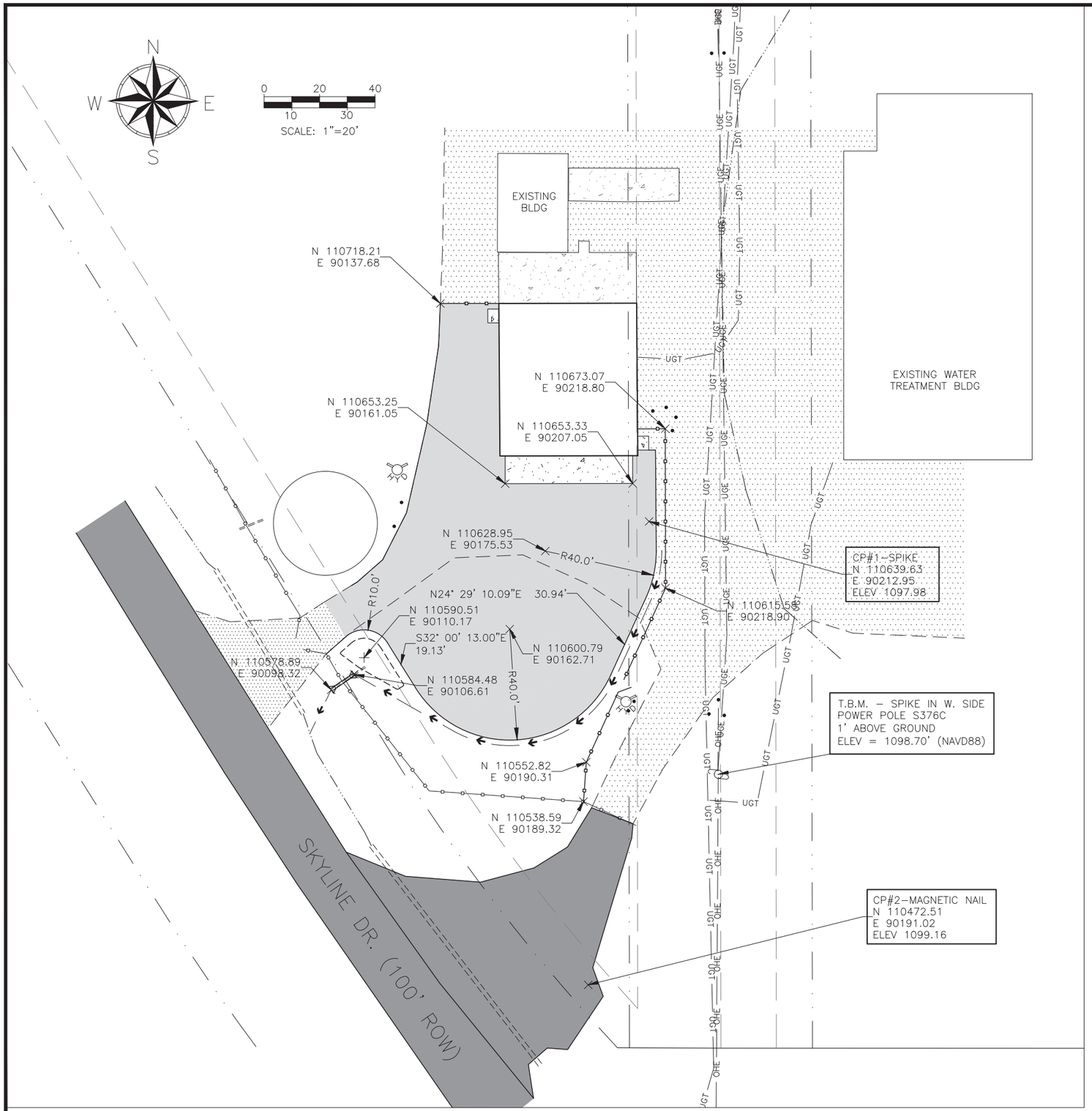

A
C2

SITE LAYOUT

GRAPHIC SCALE: 1" = 20' (22X34), 1" = 40' (11X17)

SITE LAYOUT NOTES

1. CONTRACTOR'S SURVEYOR WILL HAVE ACCESS TO ACAD DRAWING FOR SITE LAYOUT

COMMON ABBREVIATIONS

A.C.	ASPHALT CONCRETE
ACAD	AUTOCAD
ADA	AMERICANS WITH DISABLITIES ACT
APPROX	APPROXIMATE
ASS'Y	ASSEMBLY
AVG	AVERAGE
BLDG	BUILDING CORNER
BOP	BOTTOM OF PIPE
CIP	CAST IRON PIPE
CL	CENTER LINE,CLASS
CONC	CONCRETE
CONST	CONSTRUCT
COR	CORNER
CP	CONTROL POINT
DET	DETAIL
DIA	DIAMETER
DW	DRIVEWAY
DWG	DRAWING
E	EAST, ELECTRIC
EA	EACH
EG	EXISTING GROUND
EL,ELEV	ELEVATION
EOP	END OF PROJECT
EP	EDGE OF PAVEMENT
ESMT	EASEMENT
EXIST	EXISTING
FF	FINISH FLOOR
FG	FINISH GRADE
FT	FOOT, FEET
GD	GROUND
GR	GRADE
HYD	HYDRANT
HDPE	HIGH DENSITY POLYETHYLENE
IE	INVERT ELEVATION
INT	INTERSECTION
INV	INVERT
L	LENGTH
LF	LINEAR FEET
LT	LEFT
MAX	MAXIMUM
ME	MATCH EXISTING
MFR	MANUFACTURER
MKR	MARKER POST
MIN	MINIMUM
MOA	MUNICIPALITY OF ANCHORAGE
MON	MONUMENT
N	NORTH
NFS	NON FROST SUSCEPTIBLE
NTS	NOT TO SCALE
OC	ON CENTER
OH	OVERHEAD
PC	POINT OF CURVATURE
PED	PEDESTAL
PI	POINT OF INTERSECTION
PL	PROPERTY LINE
PP	POWER POLE
PVMT	PAVEMENT
R	RADIUS, RECORD
REQ'D	REQUIRED
ROW	RIGHT-OF-WAY
N.I.C.	NOT IN CONTRACT
S	SOUTH
S/W	SIDEWALK
SDMH	STORM DRAIN MANHOLE
SH	SHOULDER
SSMH	SANITARY SEWER MANHOLE
SS	SANITARY SEWER
SW	SIDEWALK
TBC	TOP BACK OF CURB
TC	TOP OF CONCRETE
TYP	TYPICAL
TW	TOP OF WALL
UTIL	UTILITY
V.E.	VISUAL ENHANCEMENT
W	WATER, WEST

STATE OF ALASKA 49TH WILLIAM J. NELSON 07-5704 REGISTERED PROFESSIONAL ENGINEER

NO.	REVISION	DATE

CONSULTING ENGINEERS
STRUCTURAL/CIVIL
155 BIDARKA ST
KENAI, AK 99611
TEL. (907) 283 - 3583
NELSONENGINEER@ALASKA.NET
NELSON ENGINEERING

HOMER FIRE STATION #2 SKYLINE DRIVE
CITY OF HOMER
HOMER, ALASKA
SITE LAYOUT

PROJECT NO. 1359
DRAWN BY: MZD
CHECKED BY: WJN
DATE: 01/15/2014
SCALES: NOTED
HORIZ. NOTED
VERT. NOTED
SHEET: C2

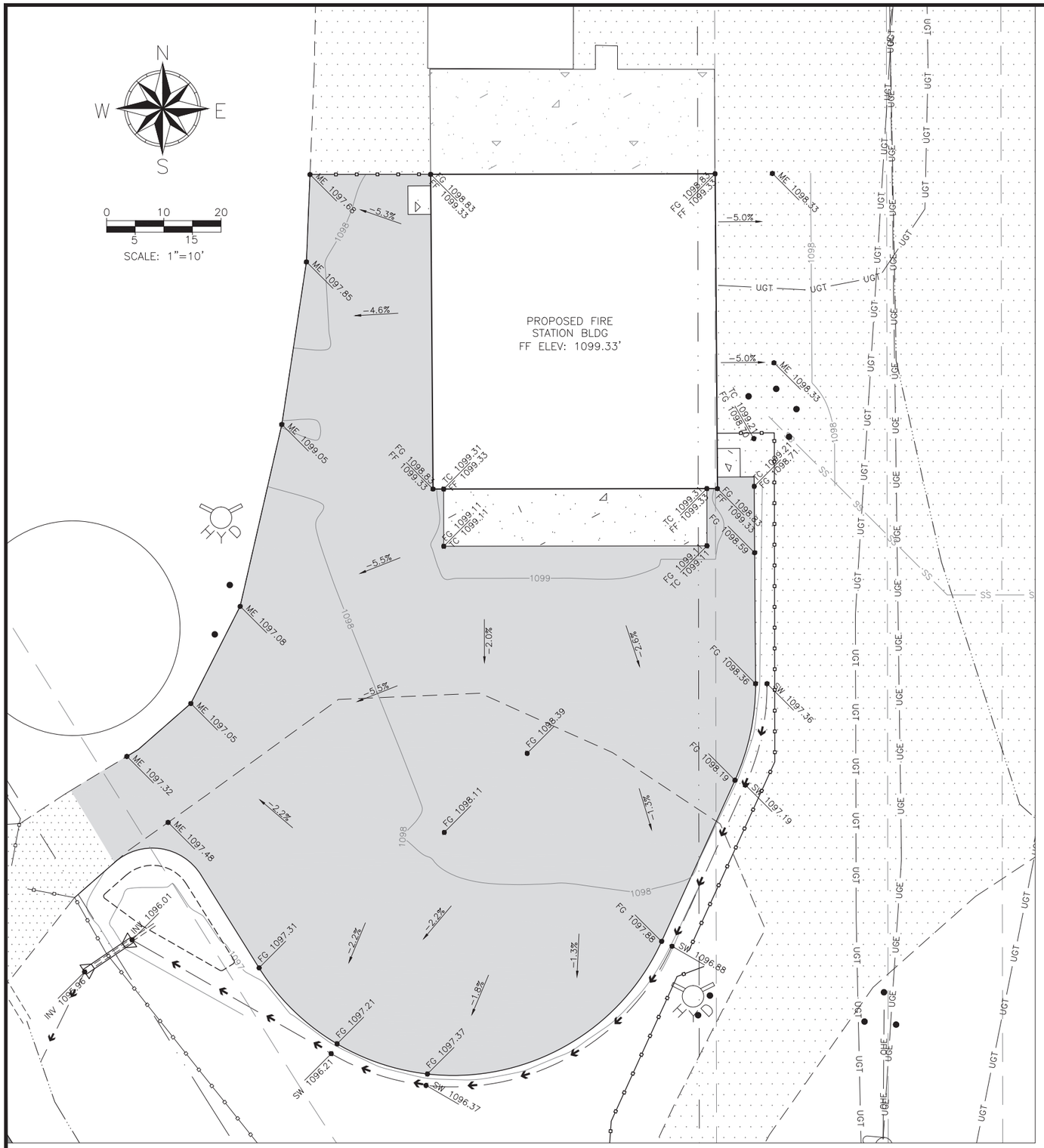

LEGEND

EG – EXISTING GROUND
FF – FINISH FLOOR
ME – MATCH EXISTING
PI – PAVEMENT INVERT
SW – SWALE
TC – TOP OF CONCRETE
TP – TOP OF PAVEMENT
TW – TOP OF WALL

XX.XX.XX SPOT ELEVATION

XXX DRAINAGE ARROW

A
C3

GRADING PLAN

GRAPHIC SCALE: 1" = 10' (22X34), 1" = 20' (11X17)

STATE OF ALASKA 49TH WILLIAM J. NELSON

NO.	REVISION	DATE

CONSULTING ENGINEERS
STRUCTURAL/CIVIL
155 BIDARKA ST
KENAI, AK 99611
TEL. (907) 283 - 3583
NELSONENGINEER@ALASKA.NET
NELSON ENGINEERING

HOMER FIRE STATION #2 SKYLINE DRIVE
CITY OF HOMER
HOMER, ALASKA
GRADING PLAN

PROJECT NO. 1359
DRAWN BY: MZD
CHECKED BY: WJN
DATE: 01/15/2014
SCALES: NOTED
HORIZ. NOTED
VERT. NOTED
SHEET: C3

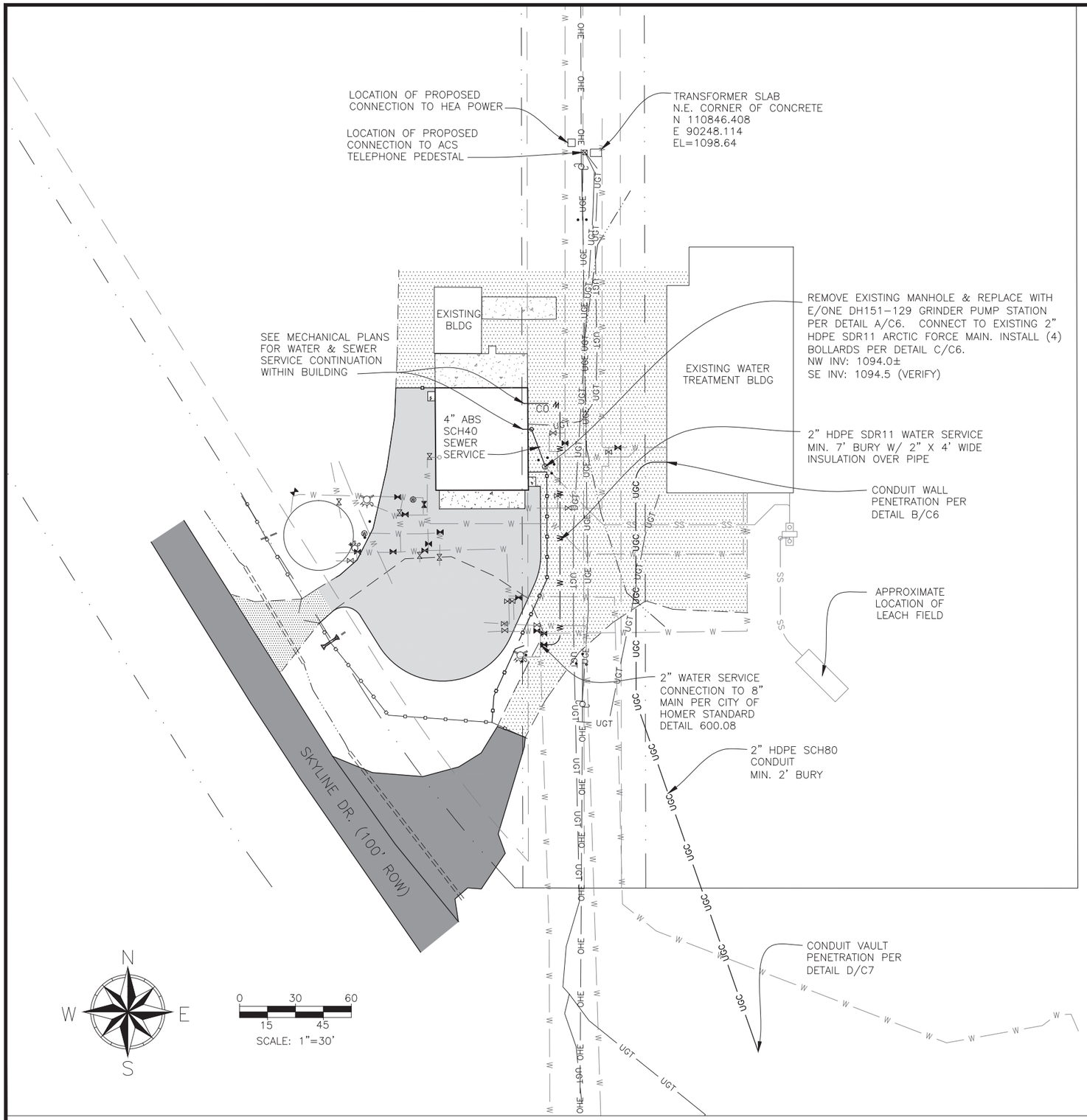

A C4 **UTILITY PLAN**

GRAPHIC SCALE: 1" = 30' (22X34), 1" = 60' (11X17)

LEGEND

	OPEN VALVE
	CLOSED VALE
SS	SEWER LINE – EXISTING
SS	SEWER LINE – PROPOSED
W	WATER LINE – EXISTING
W	WATER LINE – PROPOSED

UTILITY PLAN NOTES

1) LOCATION OF VALVES PER SURVEY LOCATES.

2) LOCATION OF EXISTING WATER & SEWER LINES ARE APPROXIMATE & BASED ON AS-BUILTS PROVIDED BY CITY OF HOMER PUBLIC WORKS DEPARTMENT. DEPTH OF EXISTING WATER & SEWER LINES IS UNKNOWN.

3) CONTRACTOR SHALL COORDINATE WITH THE CITY OF HOMER PUBLIC WORKS DEPARTMENT PRIOR TO EXCAVATING.

4) CONTRACTOR SHALL COORDINATE WITH HEA, ENSTAR, ACS, AND OWNER TO INSTALL NEW UTILITY SERVICES TO THE PROPOSED BUILDING PRIOR TO CONSTRUCTION.

STATE OF ALASKA 49TH WILLIAM J. NELSON Registered Professional Engineer 07-5970

NO.	REVISION	DATE

CONSULTING ENGINEERS
STRUCTURAL/CIVIL
155 BIDARKA ST
KENAI, AK 99611
TEL. (907) 283 - 3583
NELSONENGINEER@ALASKA.NET
NELSON ENGINEERING

HOMER FIRE STATION #2 SKYLINE DRIVE
CITY OF HOMER
HOMER, ALASKA
UTILITY PLAN

PROJECT NO. 1359
DRAWN BY: MZD
CHECKED BY: WJN
DATE: 01/15/2014
SCALES: NOTED
HORIZ. NOTED
VERT. NOTED
SHEET: C4

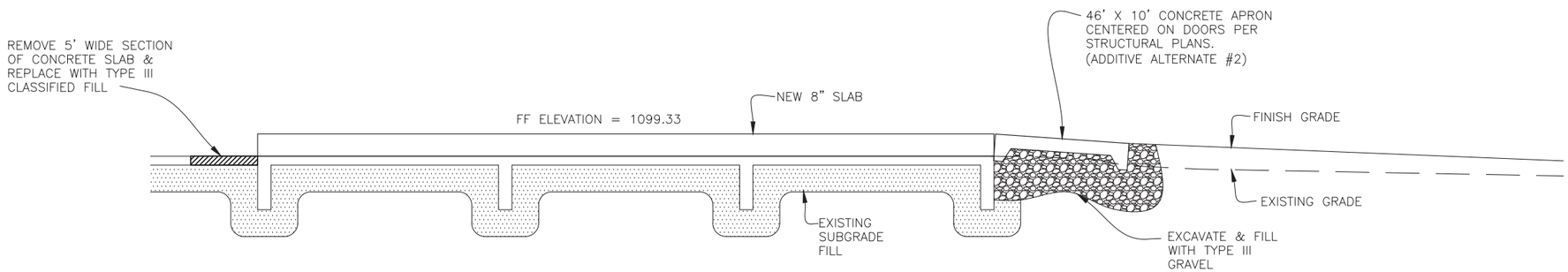

A / C5 TYPICAL SITE SECTION NORTH-SOUTH

GRAPHIC SCALE: 1" = 5' (22X24), 1" = 10' (11X17)

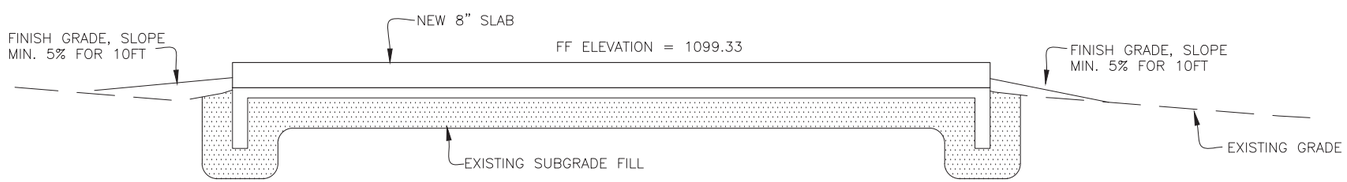

B / C5 TYPICAL SITE SECTION WEST-EAST

GRAPHIC SCALE: 1" = 5' (22X24), 1" = 10' (11X17)

STATE OF ALASKA 49TH WILLIAM J. NELSON PROFESSIONAL ENGINEER

NO.	REVISION	DATE

CONSULTING ENGINEERS
STRUCTURAL/CIVIL
155 BIDARKA ST
KENAI, AK 99611
TEL. (907) 283 - 3583
NELSONENGINEER@ALASKA.NET
NELSON ENGINEERING

HOMER FIRE STATION #2 SKYLINE DRIVE
CITY OF HOMER
HOMER, ALASKA
TYPICAL SITE SECTIONS

PROJECT NO. 1359
DRAWN BY: MZD
CHECKED BY: WJN
DATE: 01/15/2014
SCALES: NOTED
HORIZ. NOTED
VERT. NOTED
SHEET: C5
5 OF 8

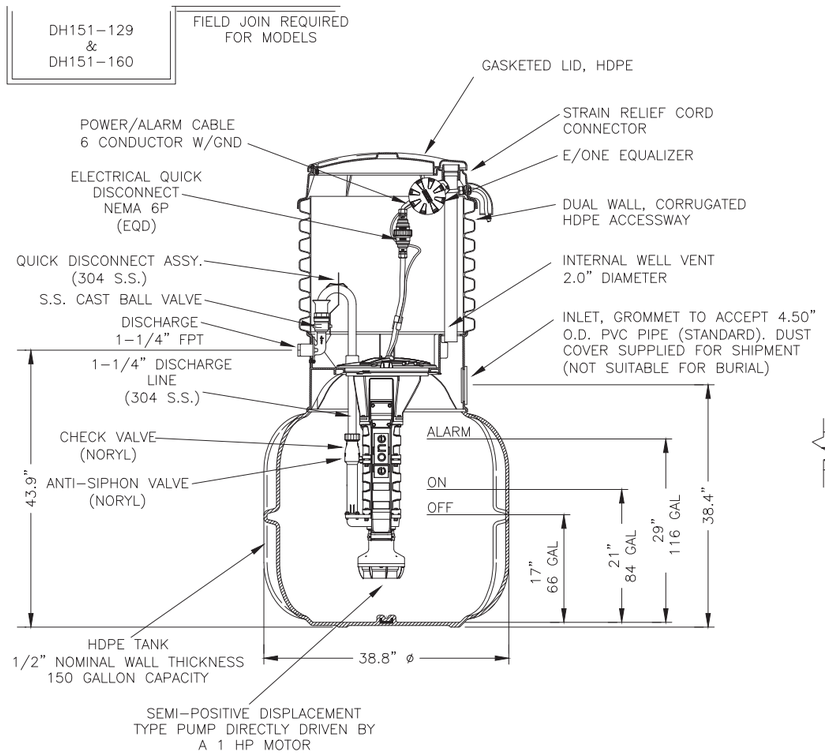

A/C6 E/ONE MODEL DH151 GRINDER PUMP STATION

GRAPHIC SCALE: 1" = 1' (22X34), 1" = 2' (11X17)

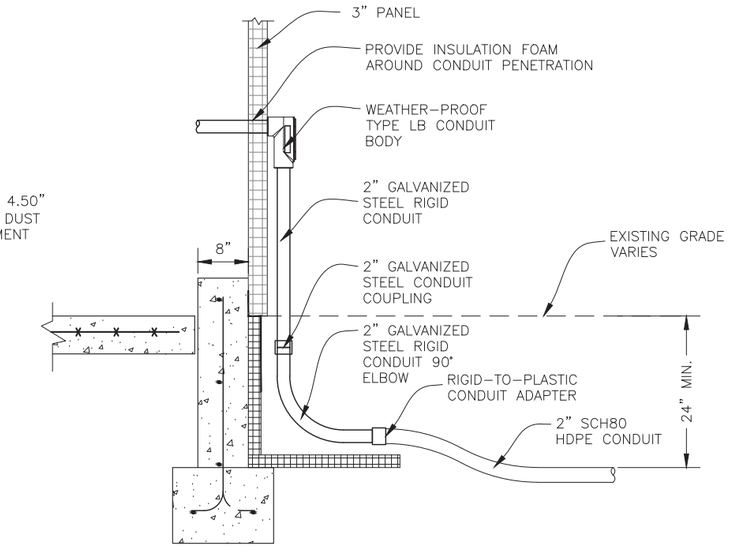

B/C6 WTP BUILDING CONDUIT PENETRATION DETAIL

GRAPHIC SCALE: NTS

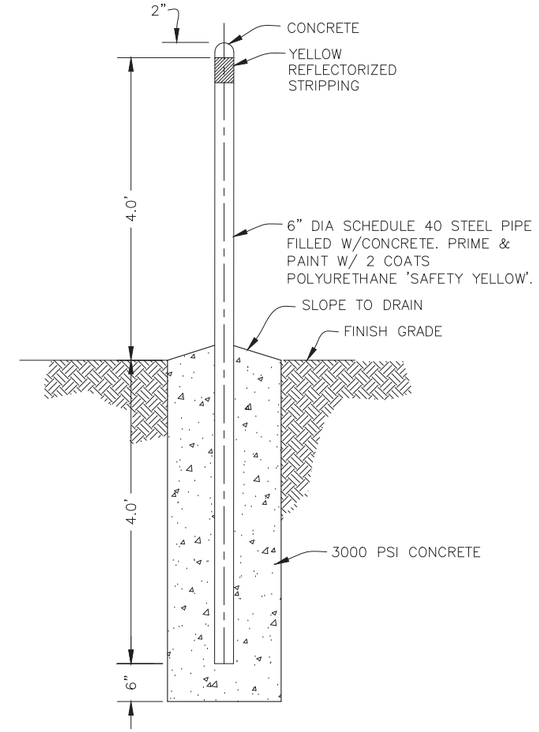

C/C6 TYPICAL BOLLARD DETAIL

GRAPHIC SCALE: NTS

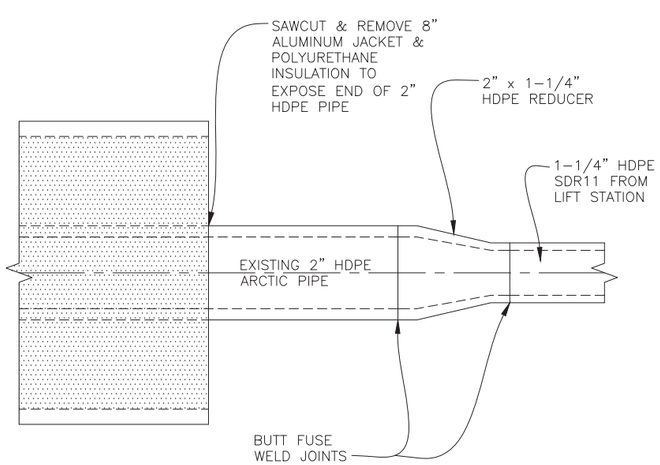

D/C6 1-1/4" HDPE TO 2" HDPE ARCTIC CONNECT

GRAPHIC SCALE: 6" = 1' (22X34), 3" = 1' (11X17)

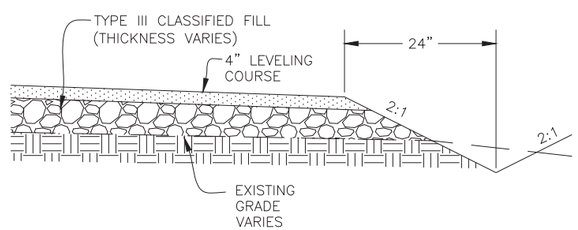

E/C6 TYPICAL SECTION - GRAVEL PARKING

GRAPHIC SCALE: 1" = 1' (22X34), 1" = 2' (11X17)

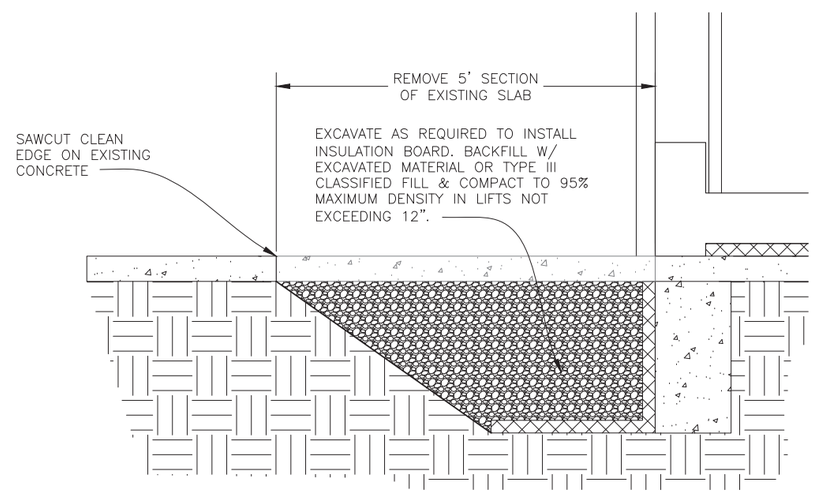

F/C6 BUILDING SLAB REMOVAL DETAIL

GRAPHIC SCALE: NTS

STATE OF ALASKA 49TH WILLIAM J. NELSON 07-5704 REGISTERED PROFESSIONAL ENGINEER

NO.	REVISION	DATE

CONSULTING ENGINEERS
STRUCTURAL/CIVIL
155 BIDARKA ST
KENAI, AK 99611
TEL. (907) 283 - 3583
NELSONENGINEER@ALASKA.NET
NELSON ENGINEERING

HOMER FIRE STATION #2 SKYLINE DRIVE
CITY OF HOMER
HOMER, ALASKA
TYPICAL DETAILS

PROJECT NO. 1359
DRAWN BY: MZD
CHECKED BY: WJN
DATE: 01/15/2014
SCALES: NOTED
HORIZ. NOTED
VERT. NOTED
SHEET: C6

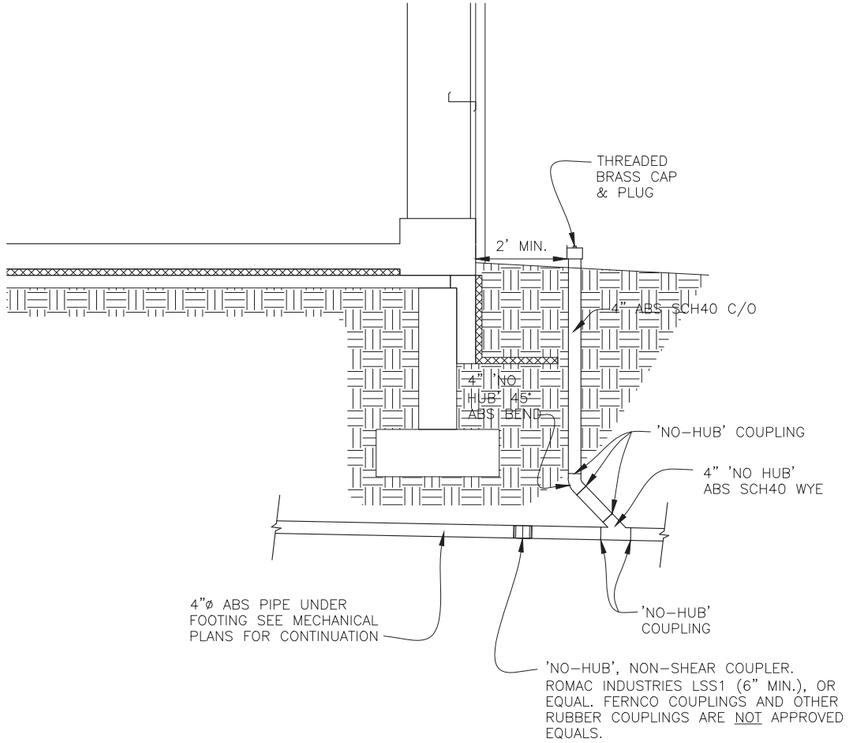

A/C7 SANITARY SEWER SERVICE DETAIL

GRAPHIC SCALE: 1/2" = 1' (22X34), 1/4" = 1' (11X17)

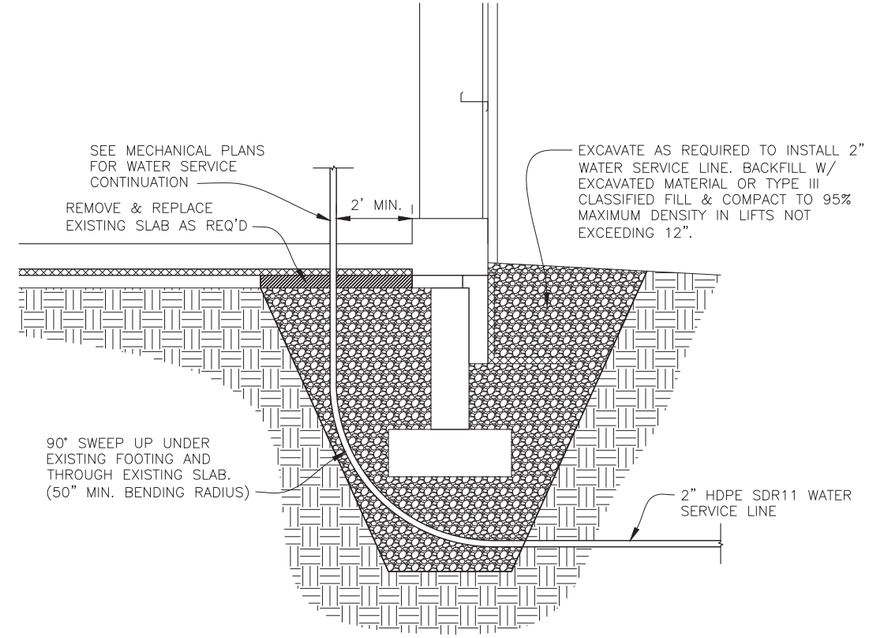

B/C7 DOMESTIC WATER SERVICE DETAIL

GRAPHIC SCALE: 1/2" = 1' (22X34), 1/4" = 1' (11X17)

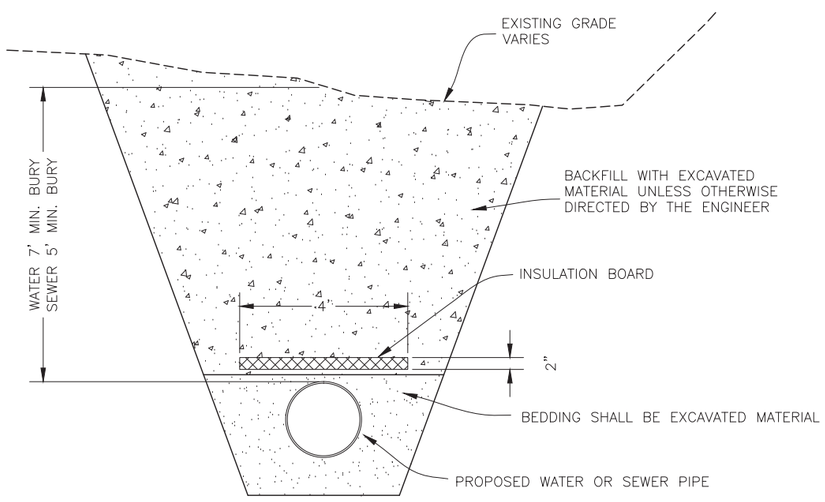

C/C7 TYPICAL TRENCH DETAIL

GRAPHIC SCALE: NTS

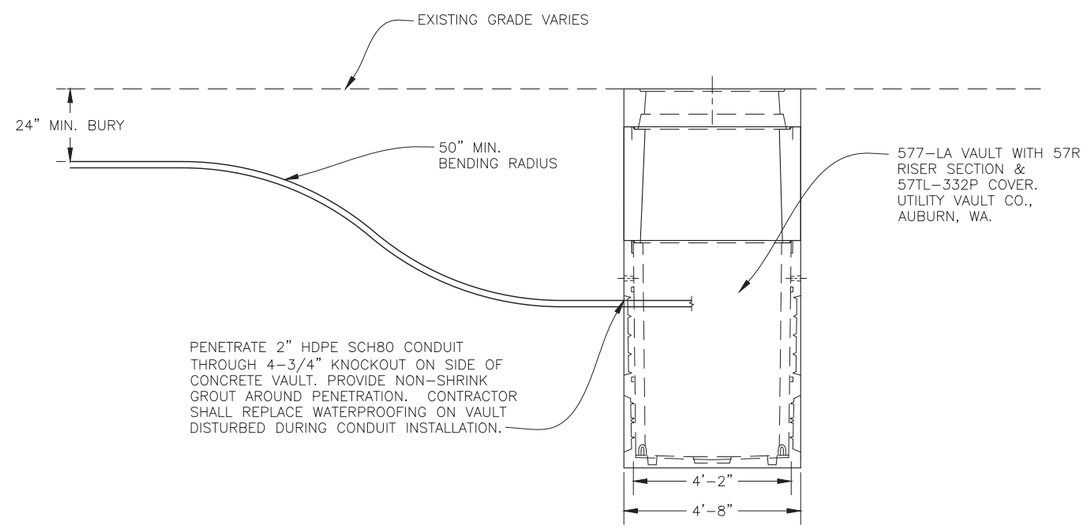

D/C7 1-MG VAULT CONDUIT PENETRATION DETAIL

GRAPHIC SCALE: NTS

STATE OF ALASKA 49TH WILLIAM J. NELSON

NO.	REVISION	DATE

CONSULTING ENGINEERS
STRUCTURAL/CIVIL
155 BIDARKA ST
KENAI, AK 99611
TEL. (907) 283 - 3583
NELSONENGINEER@ALASKA.NET
NELSON ENGINEERING

HOMER FIRE STATION #2 SKYLINE DRIVE
CITY OF HOMER
HOMER, ALASKA
TYPICAL DETAILS

PROJECT NO. 1359
DRAWN BY: MZD
CHECKED BY: WJN
DATE: 01/15/2014
SCALES: NOTED
HORIZ. NOTED
VERT. NOTED
SHEET: C7

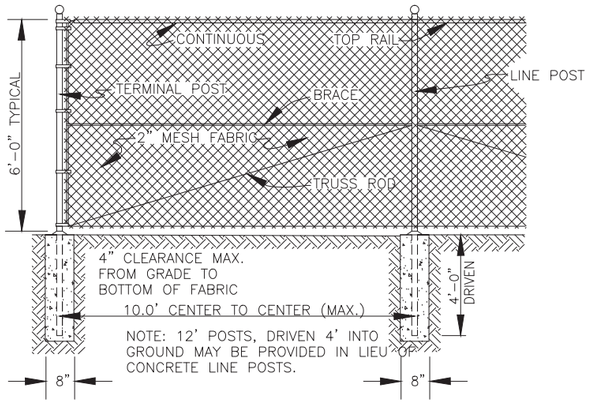

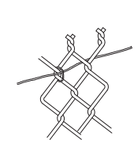

METHOD OF TYING FABRIC TO COIL SPRING TENSION WIRE

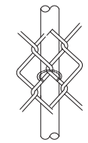

METHOD OF TYING FABRIC TO TUBULAR POST

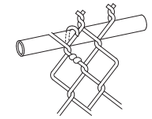

METHOD OF TYING FABRIC TO TOP RAIL

FENCE NOTES

1. POSTS SHALL BE SPACED EQUAL DISTANCES APART. MAXIMUM SPACING SHALL BE 10' UNLESS DIRECTED OTHERWISE BY THE ENGINEER.

2. POST TOPS SHALL BE SECURELY FASTED TO POST.

3. BRACE RAILS AND TRUSS RODS SHALL BE SECURELY FASTENED TO POST WITH BRACE BANDS WITH THREADED TAKE-UP ADAPTER FOR TRUSS RODS.

4. GROUND WIRE SHALL BE ATTACHED TO FENCE FABRIC BY MEANS OF A SPLIT BOLT.

5. FABRIC SHALL BE STRETCHED TO A SMOOTH UNIFORM APPEARANCE.

6. DETAILS SHOWN INDICATED GENERAL DESIGN AND DIMENSIONS MAY VARY AMONG MANUFACTURERS.

7. LINE POSTS AND CORNER POSTS SHALL BE SET IN 8" DIA. CLASS B PORTLAND CEMENT CONCRETE TO DEPTH AS INDICATED.

8. POST BRACES SHALL BE PROVIDED FOR EACH GATE, CORNER, PULL, AND END POST AND SHALL CONSIST OF A ROUND TUBULAR BRACE EXTENDING TO EACH ADJACENT POST AT MIDHEIGHT OF THE FABRIC, AND A TRUSS CONSISTING OF A ROD NOT LESS THAN 3/8" IN NOMINAL DIAMETER FROM THE ADJACENT POST BACK TO THE GATE, CORNER, PULL, OR END POST, WITH A TURNBUCKLE OR OTHER EQUIVALENT PROVISION FOR ADJUSTMENT.

9. CHANGES IN LINE OF 30° OR MORE SHALL BE CONSIDERED CORNER POSTS.

10. PROVIDE DIAGONAL BRACE RAILS AT ALL END PANELS.

11. ALL STEEL AND IRON PARTS INCLUDING FABRIC SHALL BE ZINC COATED AFTER FABRICATION IN ACCORDANCE WITH FEDERAL SPEC. QQ-Z-351 TO AN AVERAGE OF NOT LESS THAN 12 oz. PER SQUARE FOOT OF ACTUAL SURFACE.

12. USE 2" X 9 GAUGE FENCING FABRIC WITH A MINIMUM NOMINAL COATED DIAMETER 0.148 INCHES.

13. PERFORM ALL WORK IN ACCORDANCE WITH THE CITY OF HOMER STANDARD CONSTRUCTION SPECIFICATIONS, 2009 EDITION.

14. DETAILS SHOWN ARE TO INDICATE GENERAL DESIGN ONLY. DIMENSIONS MAY VARY SLIGHTLY AMONG MANUFACTURER'S.

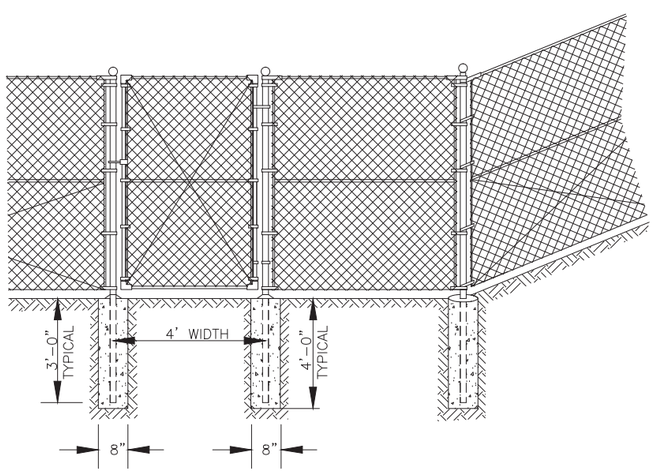

NOTE: 12' POSTS, DRIVEN 4' INTO GROUND MAY BE PROVIDED IN LIEU OF CONCRETE LINE POSTS.

STEEL FENCE SCHEDULE	
USE AND SECTION	MINIMUM OUTSIDE DIMENSIONS (NOMINAL)
CORNER, END & PULL POSTS TUBULAR – ROUND	2.875" O.D. 5.79 PLF
LINE POSTS TUBULAR – ROUND	2.375" O.D. 3.65 PLF
BRACE RAILS TUBULAR – ROUND	1.66" O.D. 2.27 PLF
TRUSS ROD ROD – ROUND	0.375" O.D. OR LARGER W/ TURNBUCKLE
TOP RAIL COILED SPRING WIRE	7 GAGE +/- 0.005" O.D. (TIES OR CLIPS SHALL BE PROVIDED EVERY 2 FT)

A
C8

TYPICAL CHAINLINK FENCE DETAILS

GRAPHIC SCALE: NTS

STATE OF ALASKA 49TH WILLIAM J. NELSON 07-5704 REGISTERED PROFESSIONAL ENGINEER

NO.	REVISION	DATE

CONSULTING ENGINEERS
STRUCTURAL/CIVIL
155 BIDARKA ST
KENAI, AK 99611
TEL. (907) 283 - 3583
NELSONENGINEER@ALASKA.NET
NELSON ENGINEERING

HOMER FIRE STATION #2 SKYLINE DRIVE
CITY OF HOMER
HOMER, ALASKA
TYPICAL DETAILS

PROJECT NO. 1359
DRAWN BY: MZD
CHECKED BY: WJN
DATE: 01/15/2014
SCALES: NOTED
HORIZ. NOTED
VERT. NOTED
SHEET: C8
8 OF 8

GENERAL
ALL MATERIALS AND CONSTRUCTION SHALL CONFORM TO REQUIREMENTS OF THE INTERNATIONAL CODE COUNCIL INTERNATIONAL BUILDING CODE (IBC) 2009 EDITION. WHERE EXPLICIT DETAILS ARE NOT SHOWN OR DESCRIBED, THE MINIMUM REQUIREMENTS OF THE ABOVE CODE SHALL APPLY. UNLESS OTHERWISE NOTED, ALL CODES, STANDARDS AND OTHER PUBLICATIONS CITED SHALL REFER TO THE LATEST EDITION.

LOCATION
THE DRAWINGS ARE INTENDED FOR THE CONSTRUCTION OF THE HOMER FIRE STATION #2 ON SKYLINE DRIVE.

DESIGN LOADS
IN ADDITION TO DEAD LOADS, THE FOLLOWING LIVE LOADS WERE USED FOR DESIGN:

ROOF: 85 P.S.F. (SNOW–2 MONTH DURATION) PLUS DRIFTING
WIND: 120 MPH, EXPOSURE D
SEISMIC: Ss=1.5, S1=0.5, SITE CLASS D.
MEZZANINE FLOOR: 125 PSF

LATERAL LOADS ARE RESISTED BY WOOD SHEAR WALLS AND DIAPHRAGMS FOR INTERIOR WOOD FRAMED STRUCTURE.

SITE WORK
PREPARATION OF A SAFE AND SUITABLE BUILDING SITE SHALL BE COMPLETED PRIOR TO CONSTRUCTION OF FOUNDATIONS AND SLABS. NO SITE INVESTIGATION OR SOILS BORINGS WERE PERFORMED BY THE ENGINEER. THE FOUNDATION DESIGN IS BASED ON THE ASSUMPTION THAT SOILS BENEATH THE FOUNDATION ARE WELL DRAINED NON FROST SUSCEPTIBLE SAND OR GRAVEL WITH LOAD CAPACITIES IN ACCORDANCE WITH IBC TABLE 1804.2 ALLOWABLE BEARING CAPACITY OF 3000 PSF WAS USED FOR DESIGN.

FOUNDATIONS
FOUNDATION IS TO BE BUILT OVER EXISTING CONCRETE FOUNDATION. EXCAVATE AND REMOVE ALL ORGANIC MATTER, DEBRIS AND FROST SUSCEPTIBLE SOILS FROM UNDER THE PROPOSED CONCRETE APRON AND TO 24" BEYOND THE BUILDING FOOTPRINT. PLACE ALL INTERIOR AND EXTERIOR FOOTINGS ON NATURAL UNDISTURBED, NON–FROST SUSCEPTIBLE (N.F.S.) SOIL OR ON COMPACTED NON–FROST SUSCEPTIBLE GRAVEL BACKFILL FREE OF ORGANIC MATTER AND DEBRIS, AND CONFORMING TO THE FOLLOWING GRADATION:

NON–FROST SUSCEPTIBLE GRAVEL BACKFILL

SIEVE:	PERCENT PASSING:
3"	100
1"	80 – 100
#4	30 – 70
#200	0 – 5

NO MORE THAN 3% OF PARTICLES BY WEIGHT SHALL BE FINER THAN 0.02 MM. BACKFILL SHALL BE PLACED IN LIFTS NOT EXCEEDING 12 INCHES IN LOOSE THICKNESS AND COMPACTED TO 95% OF MAXIMUM DRY DENSITY IN ACCORDANCE WITH ASTM SPECIFICATION D–1557.

FOUNDATION INSULATION
FOUNDATION INSULATION SHALL BE 'DOW HIGHLOAD 40' EXTRUDED POLYSTYRENE INSULATION, OR 'INSULFOAM' HIGH DENSITY EXPANDED POLYSTYRENE WITH 35 PSI MINIMUM COMPRESSIVE STRENGTH.

SLABS ON GRADE
INTERIOR SLABS: SLAB IS TO BE POURED OVER EXISTING SLAB & FOUNDATION, AND ON TOP OF NEW INSULATION. PLACE REINFORCING STEEL AT MID–DEPTH OF SLAB AND SUPPORT AT 4'O/C MAXIMUM WITH WELL CURED CONCRETE BLOCKS OR APPROVED METAL CHAIRS. DO NOT SUPPORT ON STONES. PROVIDE PREFORMED CONTROL OR CONSTRUCTION JOINTS (C.J.) AT LOCATIONS SHOWN ON THE PLANS AND AT 13' O/C MAXIMUM.

EXTERIOR SLABS: PROVIDE A MINIMUM OF 72 INCHES OF NON–FROST SUSCEPTIBLE GRAVEL BELOW SLAB CONFORMING TO THE GRADATION AND COMPACTION REQUIREMENTS DESCRIBED ABOVE FOR FOUNDATIONS.

DRAINAGE: SLOPE ALL EXTERIOR SLABS ADJACENT TO BUILDINGS TO DRAIN AWAY FROM BUILDING PERIMETER AT 1/8" PER FOOT MINIMUM SLOPE.

CONCRETE
MIXING, SELECTION OF MATERIALS, AND PLACING OF ALL CONCRETE SHALL CONFORM TO THE REQUIREMENTS OF THE IBC, CHAPTER 19. AN AIR ENTRAINING AGENT SHALL BE USED IN ALL CONCRETE MIXES FOR CONCRETE WORK WHICH IS TO BE EXPOSED TO EARTH OR WEATHER.
AIR ENTRAINMENT SHALL BE 5% +/– 1% BY VOLUME. ALL CONCRETE SHALL HAVE A MINIMUM 28 DAY COMPRESSIVE STRENGTH (F'C) = 3000 P.S.I. CONCRETE FOR INTERIOR AND EXTERIOR SLABS SHALL CONTAIN 1.6 POUNDS OF 'FORTA FIBRE D15' COLLATED FIBRILLATED POLYPROPYLENE FIBER PER CUBIC YARD OF CONCRETE. THE FIBER SHALL BE THOROUGHLY MIXED INTO THE CONCRETE IN TRANSIT TO THE SITE, IN ACCORDANCE WITH THE FIBER MANUFACTURER'S RECOMMENDATIONS.

REINFORCING STEEL
UNLESS NOTED OTHERWISE, ALL REINFORCING STEEL SHALL BE DEFORMED BARS CONFORMING TO IBC CHAPTER 19. REINFORCING BARS SHALL BE GRADE 60. REINFORCING STEEL SHALL BE SECURELY TIED IN PLACE WITH #16 DOUBLE ANNEALED IRON WIRE. REINFORCING IN FOOTINGS SHALL BE SUPPORTED ON WELL CURED CONCRETE BLOCKING OR APPROVED METAL CHAIRS. REINFORCING BARS SHALL BE SPLICED BY A LAP OF AT LEAST 30 BAR DIAMETERS. A MINIMUM LAP FOR ALL BARS SHALL BE 24". CONCRETE COVER OVER REINFORCING SHALL BE 3" FOR CONCRETE CAST AGAINST EARTH. CONCRETE COVER FOR FORMED CONCRETE THAT WILL BE EXPOSED TO WEATHER OR EARTH SHALL BE 2" MINIMUM FOR #6 THROUGH #18 BARS AND 1 1/2" MINIMUM FOR #5 BARS AND SMALLER, INCLUDING WELDED WIRE FABRIC (WWF). OTHER REINFORCEMENT SHALL HAVE A MINIMUM COVERAGE OF NOT LESS THAN 3/4". ALL REINFORCING BARS WILL BE INSPECTED BY OWNERS REPRESENTITVE PRIOR TO PLACEMENT OF CONCRETE. AT TIME OF INSPECTION ALL BARS SHALL BE INSTALLED AND SECURELY TIED IN PLACE, WET SETTING OF BARS WILL NOT BE ALLOWED. PROVIDE SHOP DRAWINGS AND MILL CERTIFICATIONS FOR REINFORCING STEEL TO OWNER FOR REVIEW PRIOR TO FABRICATION.

ANCHOR BOLTS AND CONCRETE EXPANSION ANCHORS
ANCHOR BOLTS, THREADED RODS AND CONCRETE EXPANSION ANCHORS SHALL CONFORM TO ASTM F1554 GRADE 36. CONCRETE EXPANSION ANCHORS (KB) SHALL BE "HILTI KWIK BOLT TZ" CONCRETE EXPANSION ANCHORS OR STRUCTURAL EQUIVALENT, INSTALLED IN ACCORDANCE WITH MANUFACTURER'S RECOMMENDATIONS. ANCHOR BOLTS SHALL BE PROVIDED WITH HEX HEAD NUTS AND 3"x3"x¼" STEEL PLATE WASHERS. WHERE BOLTS OR RODS ARE USED WITH CEDAR SILL PLATES, BOLTS, NUTS AND WASHERS SHALL BE GALVANIZED. ALL FASTENERS IN CONTACT WITH PRESSURE TREATED WOOD SHALL BE HOT DIPPED GALVANIZED OR SHALL BE STAINLESS STEEL. PROVIDE ⅝" X 10" ANCHOR BOLTS AT 48" O/C SPACING UNLESS NOTED OTHERWISE AND WITHIN 6" OF WALL OPENINGS AND BUILDING CORNERS. ALL CAST IN PLACE ANCHOR BOLTS SHALL BE SECURELY HELD IN POSITION AND INSPECTED BY THE OWNERS REPRESENTATIVE PRIOR TO PLACING OF CONCRETE.

POWER FASTENERS
POWER FASTENERS FOR CONNECTION TO CONCRETE, GROUTED MASONRY, OR STEEL SHALL BE POWDER ACTUATED HILTI X–AL–H HEAVY DUTY DOME HEAD NAILS WITH 0.177 INCH SHANK DIAMETER. MINIMUM FASTENER EMBEDMENT SHALL BE 1 3/8". NAIL LENGTH SHALL BE AS REQUIRED TO ACHIEVE SPECIFIED MINIMUM PENETRATION INTO SUBSTRATE.

ADHESIVE ANCHORING SYSTEM
THREADED ROD ANCHORS AND REINFORCING BAR DOWELS SHALL BE SET IN HILTI HIT–HY 150 MAX OR STRUCTURAL EQUIVALENT. ADHESIVE ANCHORS SHALL BE INSTALLED IN ACCORDANCE WITH THE ADHESIVE MANUFACTURER'S RECOMMENDED INSTALLATION PROCEDURES. MINIMUM EMBEDMENT IN CONRETE FOR ALL ANCHORS SHALL BE 5 5/8" UNLESS NOTED OTHERWISE.

PLYWOOD
ALL PLYWOOD SHALL CONFORM TO UBC STANDARD 23–2 AND SHALL BE AMERICAN PLYWOOD ASSOCIATION GRADE TRADE MARKED. PLYWOOD SHALL BE GROUP I OR GROUP II DOUGLAS FIR. ALL PANELS SHALL BE NOMINAL 4' X 8' PANELS. UTILIZE FULL SHEETS WHEREVER POSSIBLE. LAY FACE GRAIN OF ROOF AND FLOOR SHEATHING PANELS PERPENDICULAR TO JOISTS AND WITH PANEL CONTINUOUS OVER THREE OR MORE SPANS. STAGGER END JOINTS OF SUCCESSIVE COURSES 4' – 0". WALL SHEATHING SHALL BE INSTALLED WITH THE FACE GRAIN PARALLEL TO STUDS, (LONG DIMENSION VERTICAL).

FLOOR SHEATHING: SHALL BE 3/4" THICK APA RATED 40/20 SPAN RATED TONGUE AND GROOVE PLYWOOD UNDERLAYMENT WITH EXTERIOR GLUE. FLOOR SHEATHING SHALL BE GLUED AND SCREWED TO SUPPORTS WITH 2 1/2" X #6 TYPE C COARSE THREAD GRIPPERS AT 6" O/C. FASTEN FLOOR SHEATHING TO BLOCKING PANELS AND WALL PLATES AT 4" O/C WITH DESIGNATED FASTENERS. BREAK ROWS OF PANELS A MINIMUM OF 2' FROM ENDS OF JOISTS AT INTERIOR LOCATIONS.

SAWN LUMBER AND TIMBER
LUMBER SHALL CONFORM TO THE CLASSIFICATION, DEFINITION, AND GRADING REQUIREMENTS OF IBC CHAPTER 23 WITH ALLOWABLE UNIT STRESSES AS GIVEN IN THE AMERICAN FOREST & PAPER ASSOCIATION 'NATIONAL DESIGN SPECIFICATION 2001 SUPPLEMENT', TABLE 4A. LUMBER SHALL BE GRADE MARKED BY THE WEST COAST LUMBER INSPECTION BUREAU /WESTERN WOOD PRODUCTS ASSOCIATION.

ITEM	SPECIES
4 X AND LARGER	DOUGLAS FIR #2
BEARING WALL PLATES	HEM FIR #2
BEARING WALL STUDS	HEM FIR #2
ALL OTHER LUMBER	HEM FIR #2

ALL LUMBER SHALL BE FASTENED IN CONFORMANCE WITH TABLE 2304.9.1 OF THE IBC, UNLESS NOTED OTHERWISE. FASTENERS SHALL BE GALVANIZED UNLESS OTHERWISE NOTED. FASTEN ALL JOIST BLOCKING TO PLATES WITH (4) 16D MINIMUM AND FASTEN ALL WALL PLATES TO WOOD FLOORS WITH 16D AT 6" ON CENTER TYPICAL. DOUBLE TOP PLATES SHALL OVERLAP 10' – 0" MINIMUM AND SHALL BE SPLICED TOGETHER WITH 16D NAILS AT 6" ON CENTER MINIMUM UNLESS NOTED OTHERWISE.

PROVIDE JOIST/BEAM HANGERS WITH LOAD CAPACITY EQUAL TO SUPPORTED MEMBER SHEAR LOAD CAPACITY FOR ALL MEMBERS NOT OTHERWISE PROVIDED WITH DIRECT BEARING SUPPORT. PROVIDE A MINIMUM OF (2) KING STUDS AND (2) CRIPPLE STUDS FOR ALL BEARING WALL HEADERS. PROVIDE A MINIMUM OF (1)KING STUD AND (1) CRIPPLE STUD AT NON–BEARING WALL HEADERS. PROVIDE SOLID BLOCKING SUPPORT FOR BEAMS AND HEADERS CONTINUOUS DOWN TO FOUNDATIONS. MINIMUM HEADER OVER OPENINGS IN BEARING WALLS SHALL BE 4X12 DF#1 UNLESS NOTED OTHERWISE.
MINIMUM HEADER IN NON–BEARING INTERIOR PARTITION WALLS SHALL BE A SINGLE 2X8.

BOLT HEADS AND NUTS BEARING AGAINST WOOD TO BE PROVIDED WITH FLAT WASHERS. SOLID BLOCKING OF NOT LESS THAN 2" NOMINAL THICKNESS SHALL BE PROVIDED AT ENDS AND AT ALL SUPPORTS OF JOISTS AND RAFTERS, UNLESS SHOWN OTHERWISE. BEAM AND JOIST HANGERS SHALL HAVE A CAPACITY EQUAL TO THE SHEAR STRENGTH OF THE BEAM OR JOIST WHICH IT IS SUPPORTING, UNLESS NOTED OTHERWISE. ALL METAL FRAMING ANCHORS AND HANGERS SHOWN ON DRAWINGS SHALL BE "STRONG TIE CONNECTORS" AS MANUFACTURED BY SIMPSON COMPANY OR APPROVED EQUAL. ALL SIMPSON CONNECTORS IN CONTACT WITH PRESSURE TREATED WOOD SHALL BE TYPE 304 OR TPYE 316 STAINLESS STEEL.

PROVIDE MIN 2X BLOCKING IN ALL WOOD FRAMED WALLS FOR MOUNTING HARDWARE AND ACCESSORIES SUCH AS BUT NOT LIMITED TO GRAB BARS, BATHROOM ACCESSORIES, DOOR STOPS, ETC.

STRUCTURAL STEEL AND CONNECTORS
STRUCTURAL STEEL SHALL CONFORM TO IBC CHAPTER22, FOR ASTM SPECIFICATION A–36, FY = 36 K.S.I. EXCEPT WHERE NOTED OTHERWISE. STEEL W–SHAPES SHALL CONFORM TO ASTM A992 FY = 50 KSI. STEEL TUBING (TS) SHALL CONFORM TO ASTM A500, GRADE B, FY = 46 K.S.I. DESIGN, FABRICATION AND ERECTION SHALL BE IN ACCORDANCE WITH THE IBC CHAPTER 22, DIVISION IX, ALLOWABLE STRESS DESIGN. MACHINE BOLTS (MB) SHALL CONFORM TO ASTM 307 AND SHALL BE PROVIDED WITH STANDARD HEX HEAD NUTS CONFORMING TO ASTM A563, GRADE A AND HARDENED STEEL CIRCULAR WASHERS CONFORMING TO ASTM F436. ALL WELDING SHALL CONFORM TO AMERICAN WELDING SOCIETY D1.1. WELD ALL FAYING SUREFACES WITH CONTINUOUS 3/16" FILLET WELD (MINIMUM) UNLESS OTHERWISE NOTED. ELECTRODES SHALL BE A.W.S. E–70. ANCHOR ALL COLUMNS WITH MINIMUM (4) 3/4" X 10" ANCHOR BOLTS UNLESS SHOWN OTHERWISE. PROVIDE ADEQUATE LATERAL BRACING FOR STRUCTURE DURING CONSTRUCTION.

ORIENTED STRAND BOARD (OSB)
ALL ORIENTED STRAND BOARD SHALL CONFORM TO UBC STANDARD 23–3 AND SHALL BE AMERICAN PLYWOOD ASSOCIATION GRADE TRADE MARKED. ALL PANELS SHALL BE NOMINAL 4' X 8' PANELS. UTILIZE FULL SHEETS WHEREVER POSSIBLE. LAY STRENGTH AXIS OF ROOF AND FLOOR SHEATHING PANELS PERPENDICULAR TO SUPPORTS AND WITH PANEL CONTINUOUS OVER THREE OR MORE SPANS. STAGGER END JOINTS OF SUCCESSIVE COURSES 4'.

OSB WALL SHEATHING: SHALL BE 7/16" PANELS WITH EXTERIOR GLUE. UNLESS NOTED OTHERWISE ON THE DRAWINGS, WALL SHEATHING SHALL BE FASTENED TO FRAMING WITH 8D GALVANIZED NAILS 6" O/C ALONG PANEL EDGES AND 12" O/C ALONG INTERMEDIATE SUPPORTS. WALL SHEATHING SHALL BE BLOCKED AT ALL EDGES WITH NOMINAL 2" SOLID BLOCKING.

PRESSURE TREATED WOOD
ALL WOOD INDICATED AS PRESSURE TREATED, (PT) SHALL BE PRESSURE TREATED (PT) IN ACCORDANCE THE AMERICAN WOOD PRESERVER'S ASSOCIATION STANDARD U1–02. THE PRESERVATIVE SHALL BE ALKALINE COPPER QUAT (ACQ). ALL WOOD SHLL BE TREATED TO A RETENTION OF 0.60 PCF AS REQUIRED FOR 'GROUND CONTACT' ALL PRESSURE TREATED WOOD SHALL BE APPROPRIATELY MARKED ATTESTING TO COMPLIANCE WITH THESE REQUIREMENTS. LUMBER SHALL BE DRIED AFTER TREATMENT TO A MOISTURE CONTENT OF 19% OR LESS. APPLY RE–TREATING AGENT TO ALL CUT ENDS, COUNTERSINK AND DRILLED HOLES IN TREATED LUMBER IN ACCORDANCE WITH MANUFACTURERS RECOMMENDATIONS. <u>ALL BOLTS, NAILS AND SIMPSON CONNECTORS IN CONTACT WITH PRESSURE TREATED WOOD SHALL BE TYPE 304 OR TYPE 316 STAINLESS STEEL OR HOT DIPPED GALVANIZED STEEL.</u>

STATE OF ALASKA 49TH Wilson J. Nelson 01/15/14 Registered Professional Engineer

NO.	REVISION	DATE

CONSULTING ENGINEERS
STRUCTURAL/CIVIL
155 BIDARKA ST
KENAI, AK 99611
TEL. (907) 283 - 3583
NELSONENGINEER@ALASKA.NET
NELSON ENGINEERING

HOMER FIRE STATION #2 SKYLINE DRIVE
CITY OF HOMER
HOMER, AK
NOTES & SPECIFICATIONS

PROJECT NO. 1359
DRAWN BY: CAM
CHECKED BY: WJN
DATE: 01/15/14
SCALES: NOTED
HORIZ. NOTED
VERT. NOTED
SHEET S0.1

SPECIAL INSPECTION

OWNER SHALL PROVIDE A SPECIAL INSPECTION PROGRAM IN ACCORDANCE WITH IBC CHAPTER 17. INSPECTIONS SHALL INCLUDE THE FOLLOWING ITEMS.

TABLE 1704.4
REQUIRED VERIFICATION AND INSPECTION OF CONCRETE CONSTRUCTION

VERIFICATION AND INSPECTION	CONT.	PERIODIC	REFERENCED STANDARD[a]	IBC REF
1. INSPECTION FOR REINFORCING STEEL, INCLUDING PRESTRESSING TENDONS, AND PLACEMENT.	–	X	ACI 318: 3.5, 7.1–7.7	1913.4
2. INSPECTION OF REINFORCING STEEL WELDING IN ACCORDANCE WITH TABLE 1704.3, ITEM 5b.	–	–	AWS D1.4 ACI 318:3.5.2	–
3. INSPECTION OF BOLTS TO BE INSTALLED IN CONCRETE PRIOR TO AND DURING PLACEMENT OF CONCRETE WHERE ALLOWABLE LOADS HAVE BEEN INCREASED WHERE STRENGTH DESIGN IS USED.	X	–	ACI318: 8.1.3, 21.2.8	1911.5, 1912.1
4. INSPECTION OF ANCHORS INSTALLED IN HARDENED CONCRETE	–	X	ACI3 18: 3.8.6, 8.1.3, 21.2.8	1912.1
5. VERIFY USE OF REQUIRED DESIGN MIX	–	X	ACI 318: CH. 4, 5.2–5.4	1904.2.2, 1913.2, 1913.3
6. AT THE TIME FRESH CONCRETE IS SAMPLED TO FABRICATE SPECIMENS FOR STRENGTH TESTS, PERFORM SLUMP AND AIR CONTENT TESTS, AND DETERMINE THE TEMPERATURE OF THE CONCRETE.	X	–	ASTM C 172 ASTM C 31 ACI 318: 5.6, 5.8	1913.9
7. INSPECTION OF CONCRETE AND SHOTCRETE PLACEMENT FOR PROPER APPLICATION TECHNIQUES.	X	–	ACI 318: 5.9, 5.10	1913.6, 1913.7, 1913.8
8. INSPECTION FOR MAINTENANCE OF SPECIFIED CURING TEMPERATURE AND TECHNIQUES	–	X	ACI 318: 5.11–5.13	1913.9
9. INSPECT FORMWORK FOR SHAPE, LOCATION AND DIMENSIONS OF THE CONCRETE MEMBER BEING FORMED.	–	X	ACI 318: 6.1.1	–

[a] WHERE APPLICABLE, SEE ALSO SECTION 1707.1, SPECIAL INSPECTION FOR SEISMIC RESISTANCE

TABLE 1704.7
REQUIRED VERIFICATION AND INSPECTION OF SOILS

VERIFICATION AND INSPECTION TASK	CONTINUOUS DURING TASK LISTED	PERIODICALLY DURING TASK LISTED
1. VERIFY MATERIALS BELOW SHALLOW FOUNDATION ARE ADEQUATE TO ACHIEVE THE DESIGN BEARING CAPACITY .	–	X
2. VERIFY EXCAVATIONS ARE EXTENDED TO PROPER DEPTH AND HAVE REACHED PROPER MATERIAL.	–	X
3. PERFORM CLASSIFICATION AND TESTING OF COMPACTED FILL MATERIALS.	–	X
4. VERIFY USE OF PROPER MATERIALS, DENSITIES AND LIFT THICKNESSES DURING PLACEMENT AND COMPACTION OF COMPACTED FILL.	X	–
5. PRIOR TO PLACEMENT OF COMPACTED FILL, OBSERVE SUBGRADE AND VERIFY THAT SITE HAS BEEN PREPARED PROPERLY.	–	X

STATE OF ALASKA 49TH Wilson J. Nelson 01/15/14 Registered Professional Engineer

NO.	REVISION	DATE

CONSULTING ENGINEERS
STRUCTURAL/CIVIL
155 BIDARKA ST
KENAI, AK 99611
TEL. (907) 283 - 3583
NELSONENGINEER@ALASKA.NET
NELSON ENGINEERING

HOMER FIRE STATION #2 SKYLINE DRIVE
CITY OF HOMER
HOMER, AK
SPECIAL INSPECTION

PROJECT NO. 1359
DRAWN BY: CAM
CHECKED BY: WJN
DATE: 01/15/14
SCALES: NOTED
HORIZ. NOTED
VERT. NOTED
SHEET S0.2

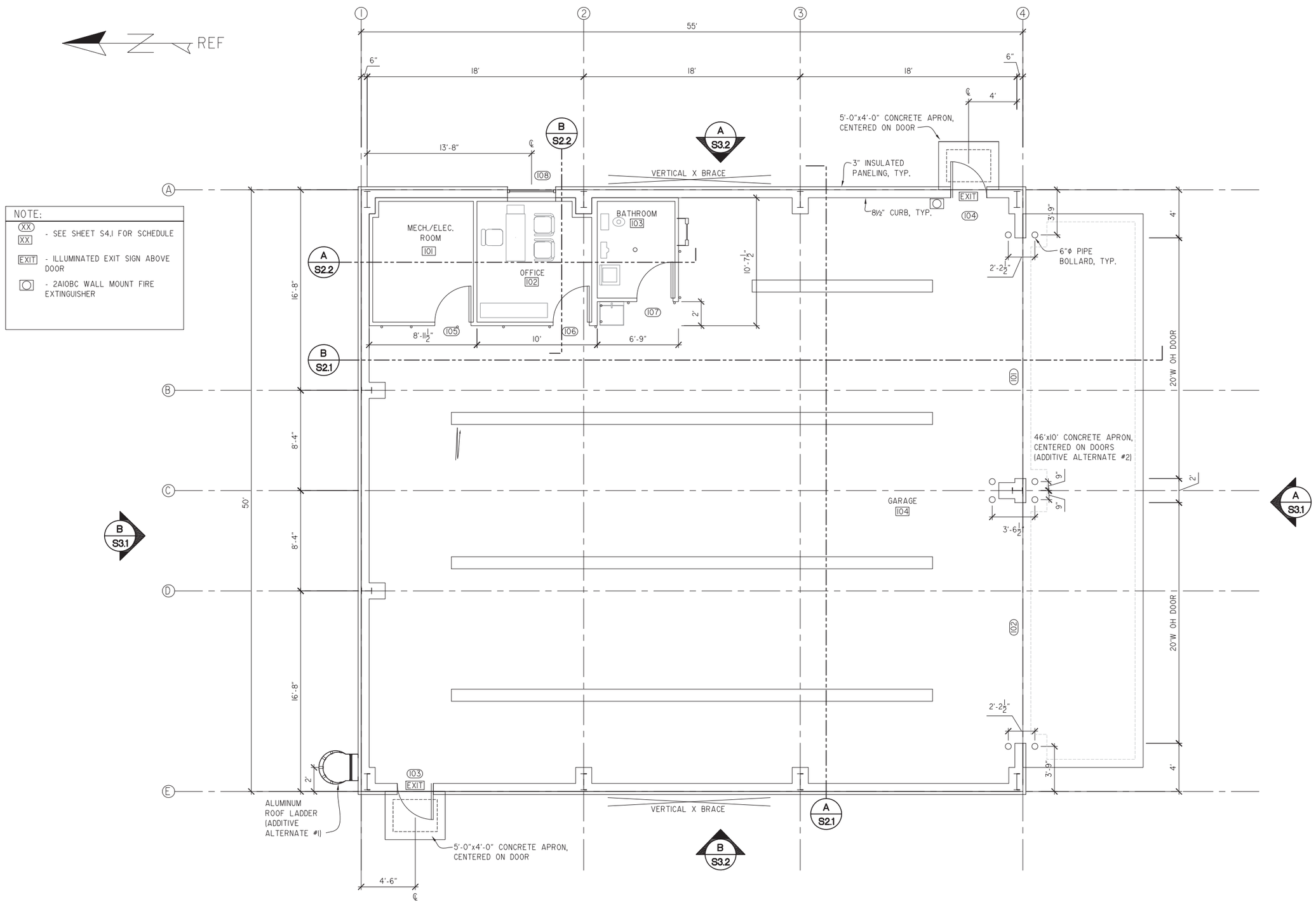

NOTE:

- (XX) XX - SEE SHEET S4.1 FOR SCHEDULE
- EXIT - ILLUMINATED EXIT SIGN ABOVE DOOR
- 2A10BC WALL MOUNT FIRE EXTINGUISHER

A S1.1 FLOOR PLAN

SCALE: 1/4"=1'-0" (22x34) / 1/8"=1'-0" (11x17)

STATE OF ALASKA 49TH Wilson J. Nelson Registered Professional Engineer 01/15/14

NO.	REVISION	DATE

CONSULTING ENGINEERS
STRUCTURAL/CIVIL
155 BIDARKA ST
KENAI, AK 99611
TEL. (907) 283 - 3583
NELSONENGINEER@ALASKA.NET
NELSON ENGINEERING

HOMER FIRE STATION #2 SKYLINE DRIVE
CITY OF HOMER
HOMER, AK
FLOOR PLAN

PROJECT NO. 1359
DRAWN BY: CAM
CHECKED BY: WJN
DATE: 01/15/14
SCALES: NOTED
HORIZ. NOTED
VERT. NOTED
SHEET S1.1

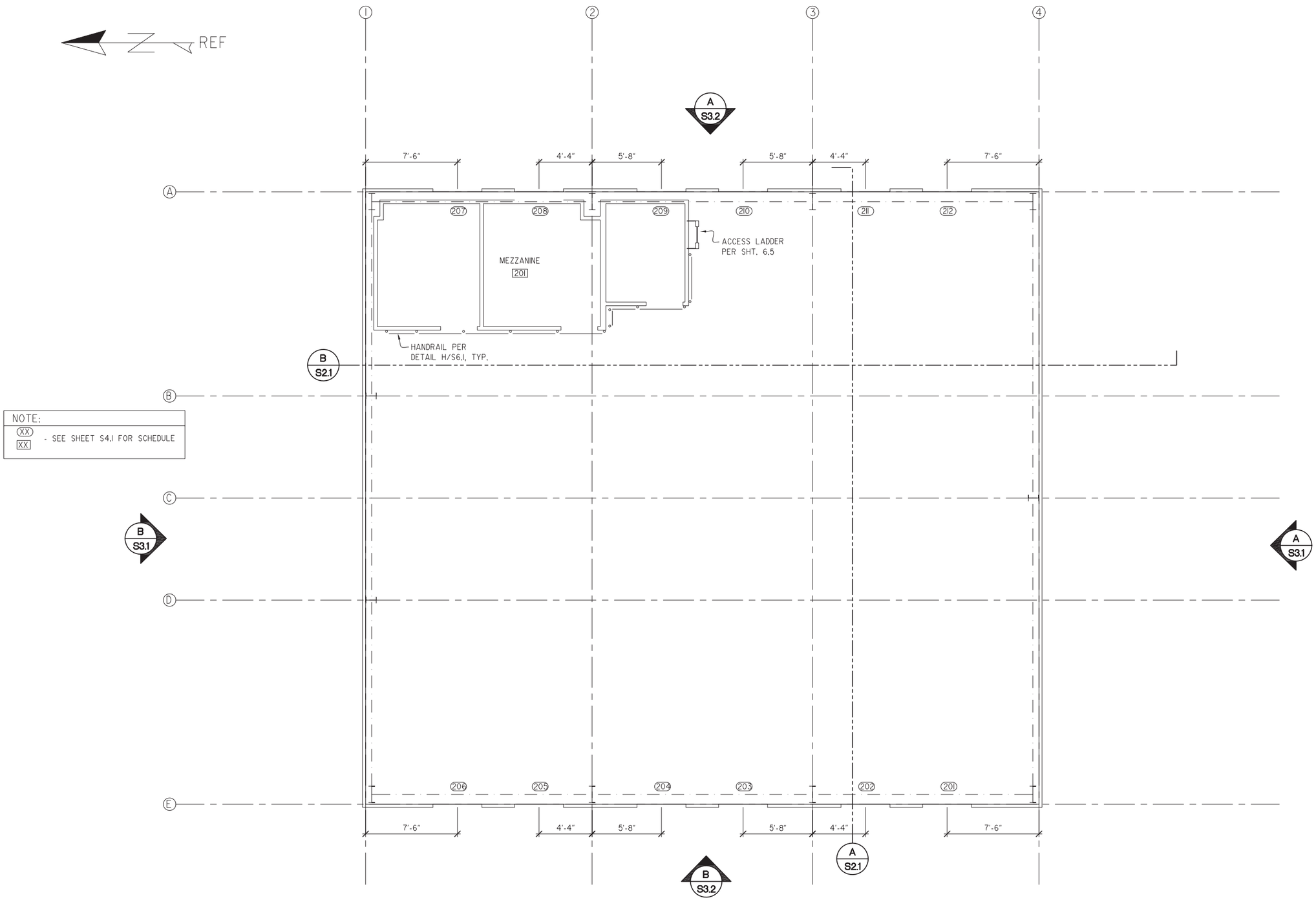

NOTE:

XX
XX - SEE SHEET S4.1 FOR SCHEDULE

A S1.2 MEZZANINE FLOOR PLAN

SCALE: 1/4"=1'-0" (22x34) / 1/8"=1'-0" (11x17)

STATE OF ALASKA 49TH
Wilson J. Nelson
Registered Professional Engineer
01/15/14

NO.	REVISION	DATE

CONSULTING ENGINEERS
STRUCTURAL/CIVIL
155 BIDARKA ST
KENAI, AK 99611
TEL. (907) 283 - 3583
NELSONENGINEER@ALASKA.NET
NELSON ENGINEERING

HOMER FIRE STATION #2 SKYLINE DRIVE
CITY OF HOMER
HOMER, AK
MEZZANINE FLOOR PLAN

PROJECT NO. 1359
DRAWN BY: CAM
CHECKED BY: WJN
DATE: 01/15/14
SCALES: NOTED
HORIZ. NOTED
VERT. NOTED
SHEET S1.2

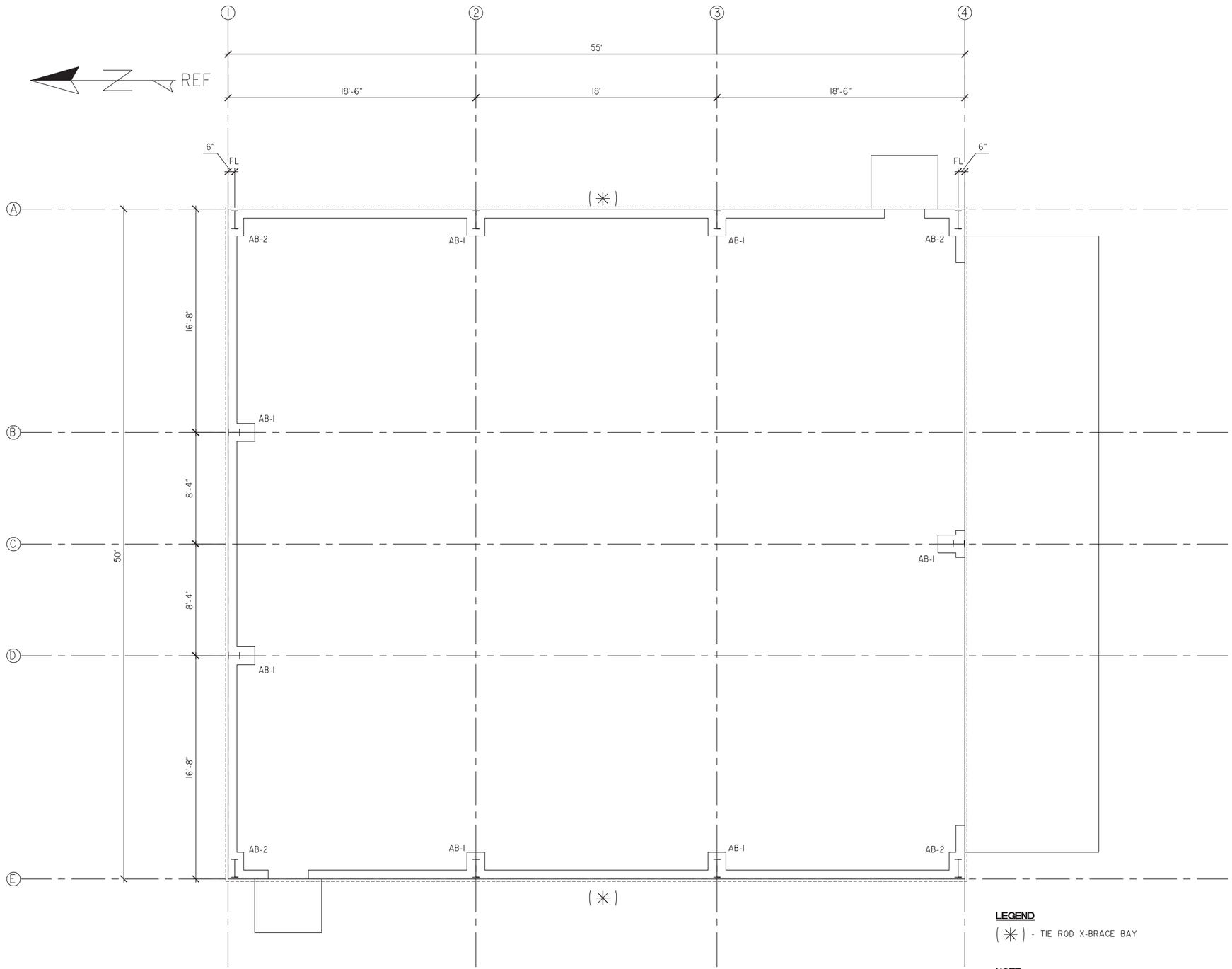

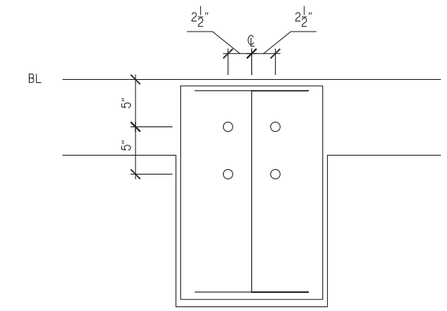

AB-1
(4) 1" DIA. F1554 GR 36 ANCHOR RODS
MAXIMUM PLATE DIMENSIONS- W=16" L=24"
ELEVATION- 100'-6"

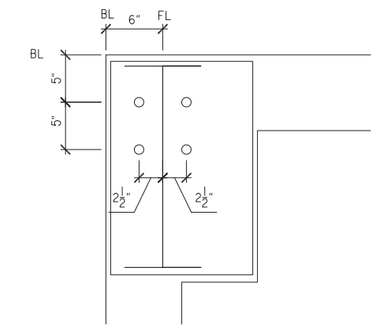

AB-2
(4) 1" DIA. F1554 GR 36 ANCHOR RODS
MAXIMUM PLATE DIMENSIONS- W=16" L=24"
ELEVATION- 100'-6"

LEGEND

(✳) - TIE ROD X-BRACE BAY

NOTE

FINISH SLAB ELEVATION
REFERENCE= 100'-0"

A / S1.3 **ANCHOR BOLT PLAN**

SCALE: 1/4"=1'-0" (22x34) / 1/8"=1'-0" (11x17)

STATE OF ALASKA 49TH Wilson J. Nelson Registered Professional Engineer 01/15/14

NO.	REVISION	DATE

CONSULTING ENGINEERS
STRUCTURAL/CIVIL
155 BIDARKA ST
KENAI, AK 99611
TEL. (907) 283 - 3583
NELSONENGINEER@ALASKA.NET
NELSON ENGINEERING

HOMER FIRE STATION #2 SKYLINE DRIVE
CITY OF HOMER
HOMER, AK
ANCHOR BOLT PLAN

PROJECT NO. 1359
DRAWN BY: CAM
CHECKED BY: WJN
DATE: 01/15/14
SCALES: NOTED
HORIZ. NOTED
VERT. NOTED
SHEET S1.3

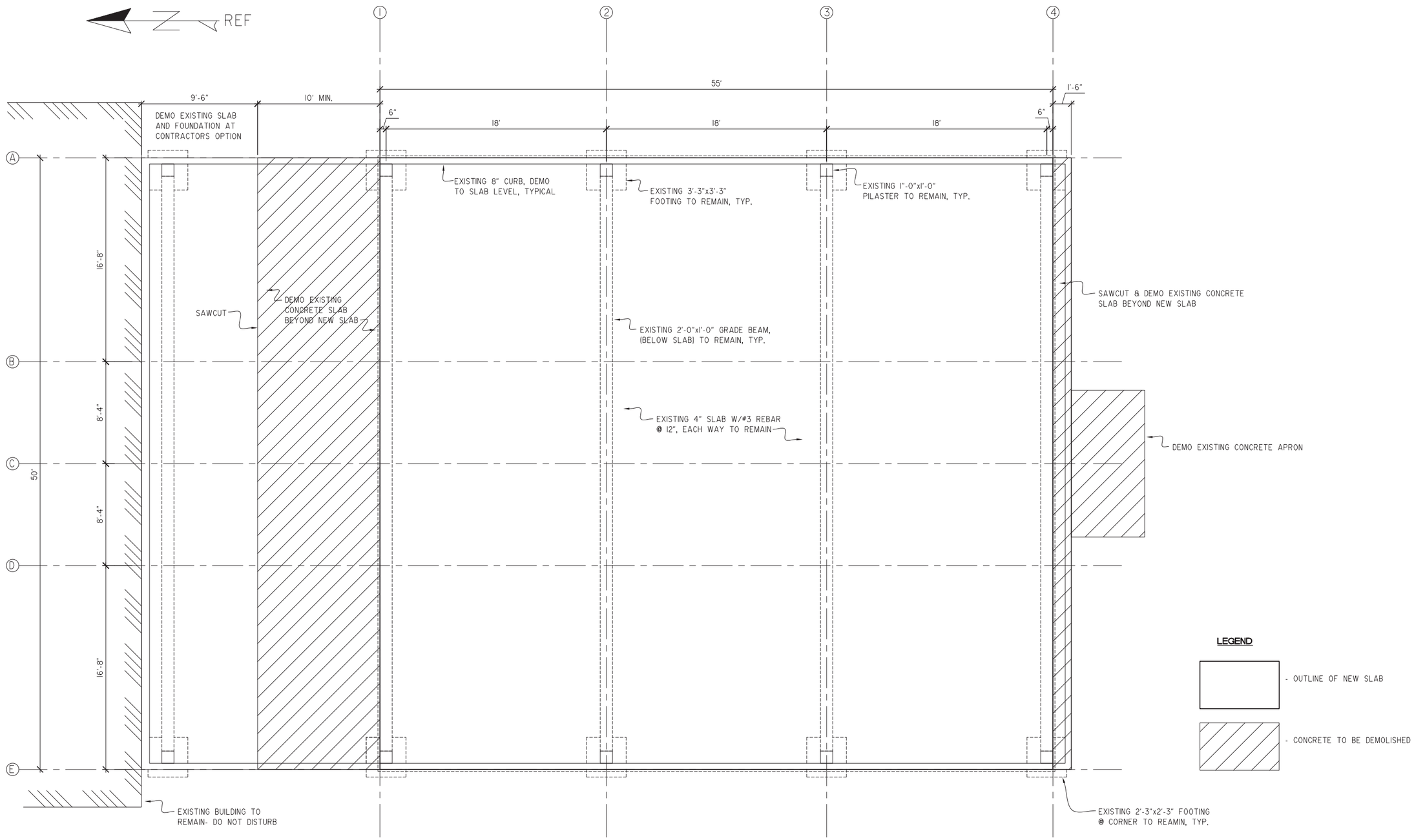

A
S1.4

DEMOLITION PLAN

SCALE: 1/4"=1'-0" (22x34) / 1/8"=1'-0" (11x17)

STATE OF ALASKA 49TH
Wilson J. Nelson
49-4969
01/15/14
Registered Professional Engineer

NO.	REVISION	DATE

CONSULTING ENGINEERS
STRUCTURAL/CIVIL
155 BIDARKA ST
KENAI, AK 99611
TEL. (907) 283 - 3583
NELSONENGINEER@ALASKA.NET
NELSON ENGINEERING

HOMER FIRE STATION #2 SKYLINE DRIVE
CITY OF HOMER
HOMER, AK
EXISTING SLAB DEMO PLAN

PROJECT NO. 1359
DRAWN BY: CAM
CHECKED BY: WJN
DATE: 01/15/14
SCALES: NOTED
HORIZ. NOTED
VERT. NOTED
SHEET S1.4

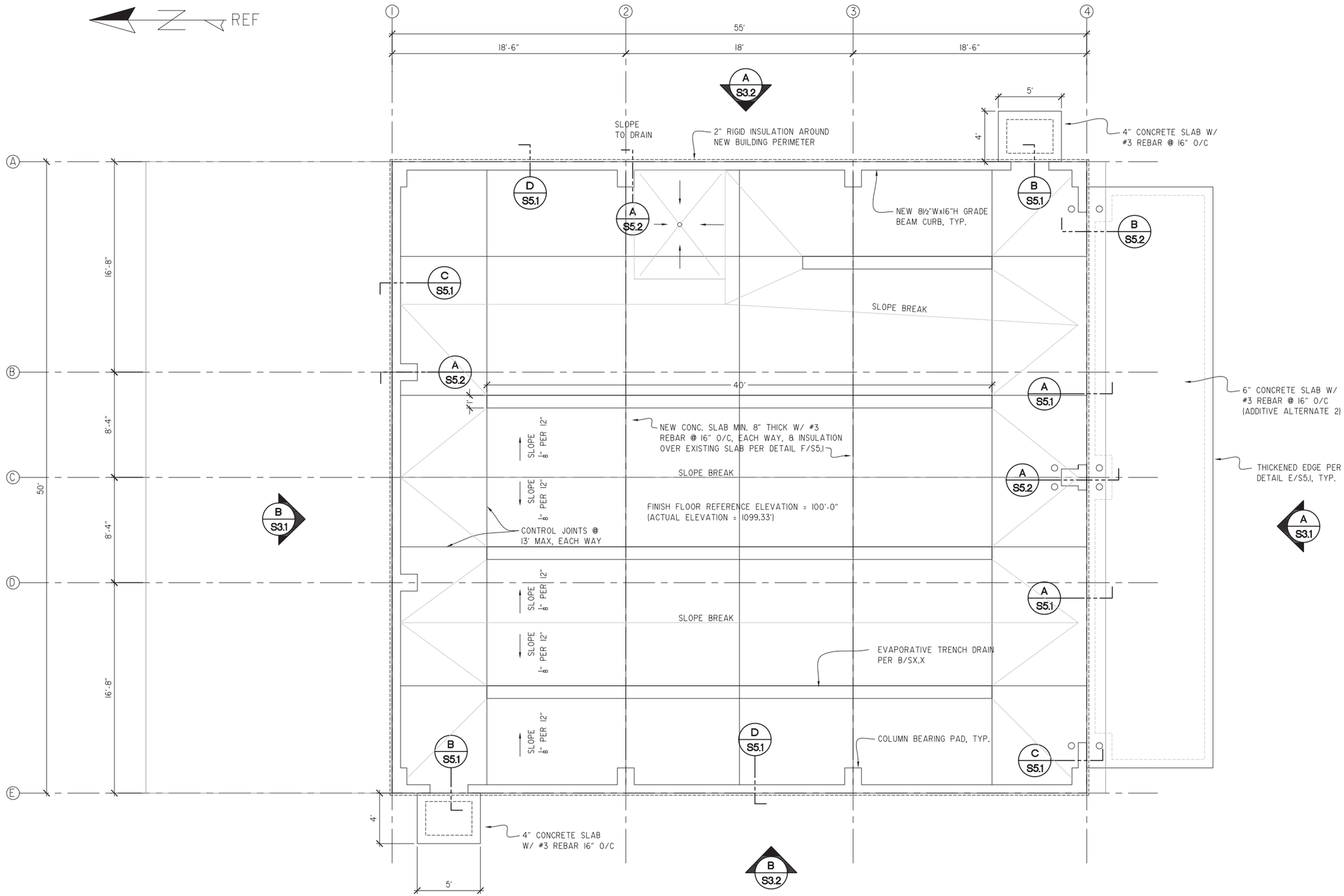

A / S1.5 NEW SLAB PLAN

SCALE: 1/4"=1'-0" (22x34) / 1/8"=1'-0" (11x17)

STATE OF ALASKA 49TH Wilson J. Nelson Registered Professional Engineer 1/15/14

NO.	REVISION	DATE

CONSULTING ENGINEERS
STRUCTURAL/CIVIL
155 BIDARKA ST
KENAI, AK 99611
TEL. (907) 283 - 3583
NELSONENGINEER@ALASKA.NET
NELSON ENGINEERING

HOMER FIRE STATION #2 SKYLINE DRIVE

CITY OF HOMER
HOMER, AK
NEW SLAB PLAN

PROJECT NO. 1359
DRAWN BY: CAM
CHECKED BY: WJN
DATE: 01/15/14
SCALES: NOTED
HORIZ. NOTED
VERT. NOTED
SHEET S1.5

REF

SHEARWALL SCHEDULE

MARK	SHEATHING	FASTENING	ANCHOR BOLTS
SW1	7/16" OSB, ONE SIDE	8D @ 6" O/C EDGES 8D @ 12" O/C EDGES	5/8"ΦX10" GALVANIZED ANCHOR BOLT @ 48" O/C

NOTES - PROVIDE SOLID BLOCKING ALONG ALL PANEL EDGES
- ALL SHEARWALLS ARE SW1

- SIMPSON HOLDOWN PER DETAIL C/S5.2
- SHEARWALL

HEADER SCHEDULE

MARK	BEAM	JACK STUD	KING STUD
A	4x10	MIN. (2) 2x	MIN. (2) 2x

NOTES - SEE DETAIL E/S6.1

- JACK & KING STUD
- HEADER

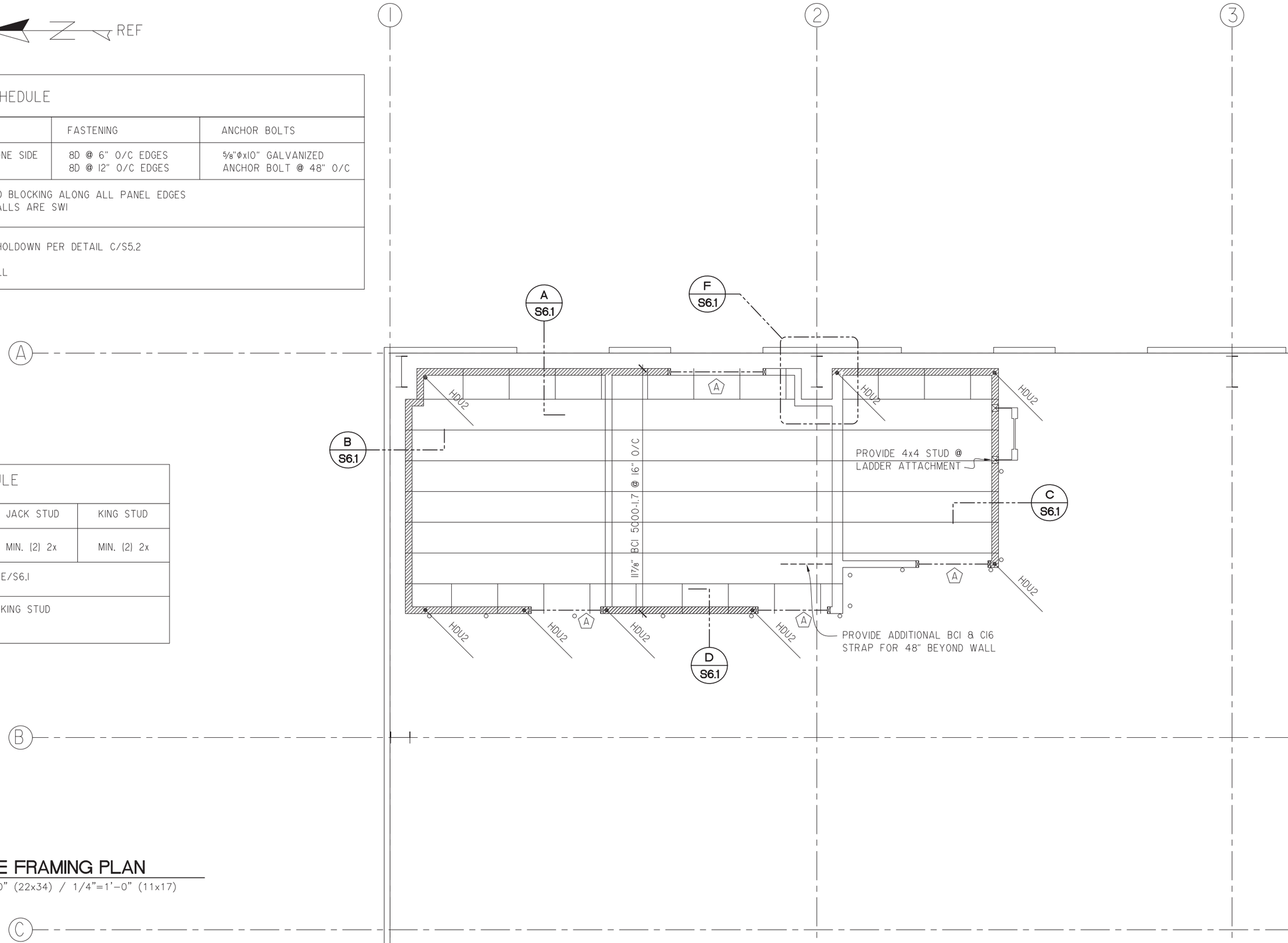

A S1.6 MEZZANINE FRAMING PLAN

SCALE: 1/2"=1'-0" (22x34) / 1/4"=1'-0" (11x17)

NO.	REVISION	DATE

CONSULTING ENGINEERS
STRUCTURAL/CIVIL
155 BIDARKA ST
KENAI, AK 99611
TEL. (907) 283 - 3583
NELSONENGINEER@ALASKA.NET
NELSON ENGINEERING

HOMER FIRE STATION #2 SKYLINE DRIVE
CITY OF HOMER
HOMER, AK
MEZZANINE FRAMING PLAN

PROJECT NO. 1359
DRAWN BY: CAM
CHECKED BY: WJN
DATE: 01/15/14
SCALES: NOTED
HORIZ. NOTED
VERT. NOTED
SHEET S1.6
8 OF 21

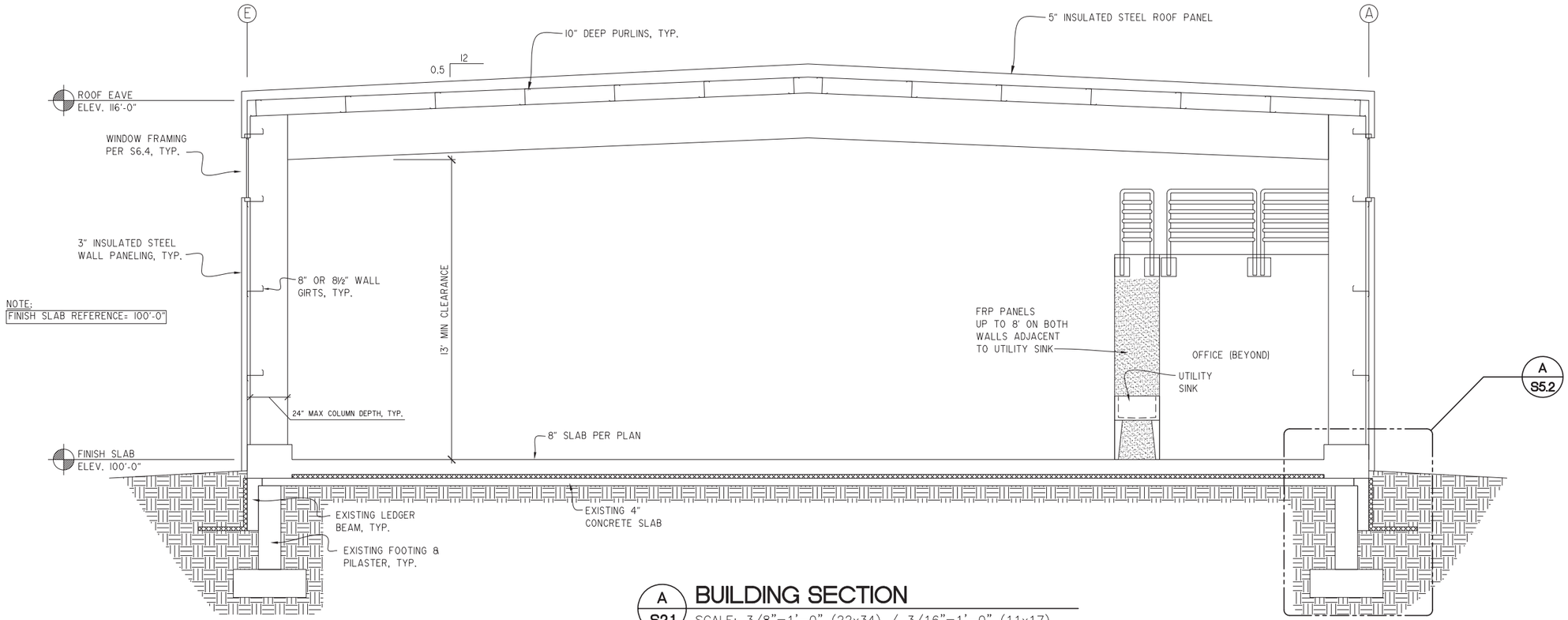

A S2.1 **BUILDING SECTION**
SCALE: 3/8"=1'-0" (22x34) / 3/16"=1'-0" (11x17)

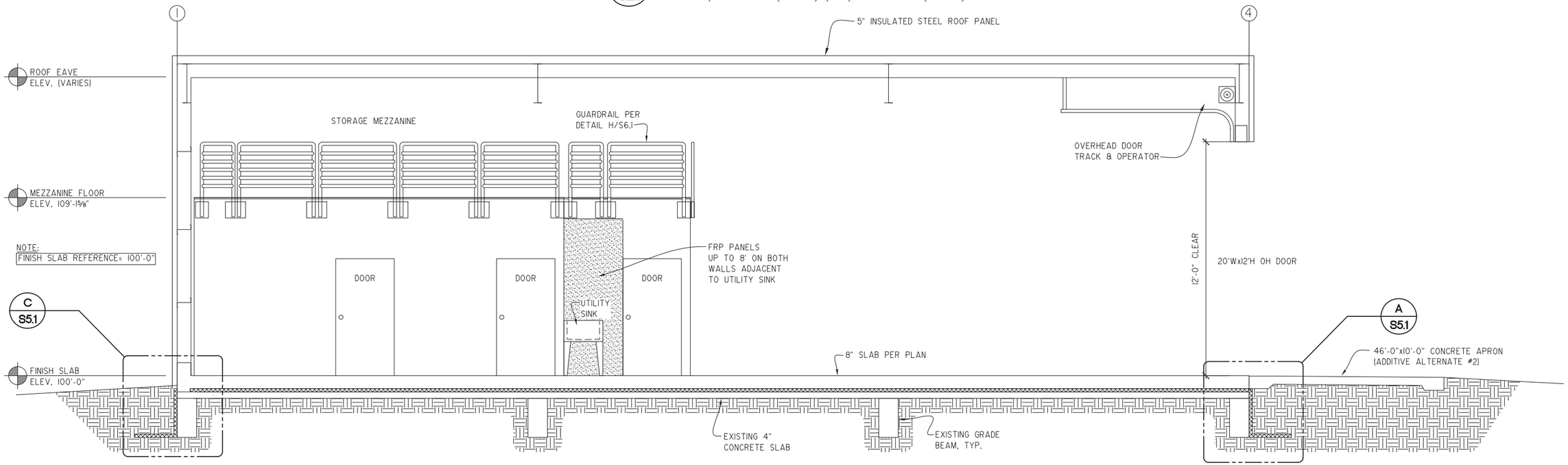

B S2.1 **BUILDING SECTION**
SCALE: 3/8"=1'-0" (22x34) / 3/16"=1'-0" (11x17)

STATE OF ALASKA 49TH
Wilson J. Nelson
01/15/14
Registered Professional Engineer

NO.	REVISION	DATE

CONSULTING ENGINEERS
STRUCTURAL/CIVIL
155 BIDARKA ST
KENAI, AK 99611
TEL. (907) 283 - 3583
NELSONENGINEER@ALASKA.NET
NELSON ENGINEERING

HOMER FIRE STATION #2 SKYLINE DRIVE
CITY OF HOMER
HOMER, AK
BUILDING SECTIONS

PROJECT NO. 1359
DRAWN BY: CAM
CHECKED BY: WJN
DATE: 01/15/14
SCALES: NOTED
HORIZ. NOTED
VERT. NOTED
SHEET **S2.1**

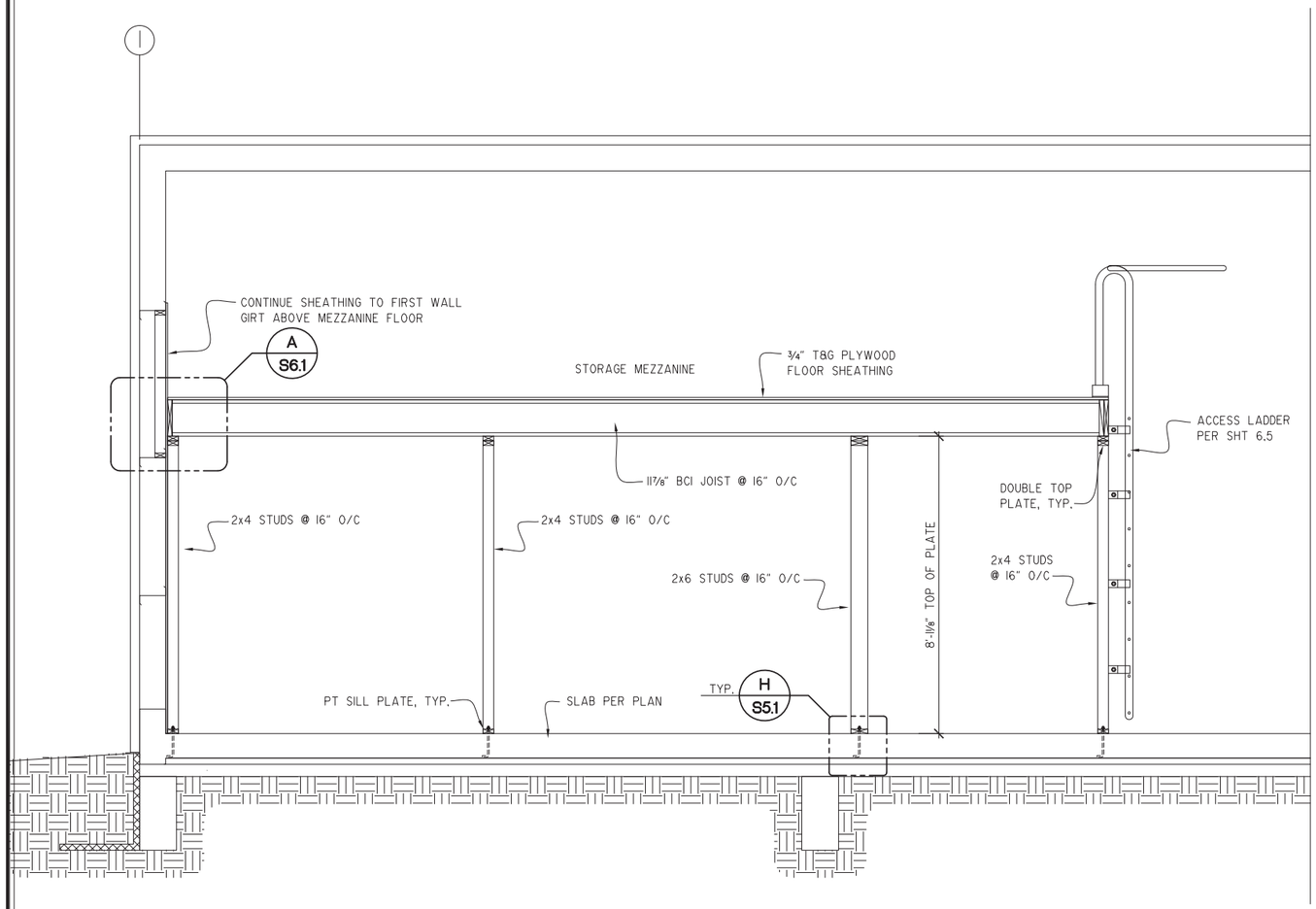

A S2.2 OFFICE SECTION

SCALE: 1/2"=1'-0" (22x34) / 1/4"=1'-0" (11x17)

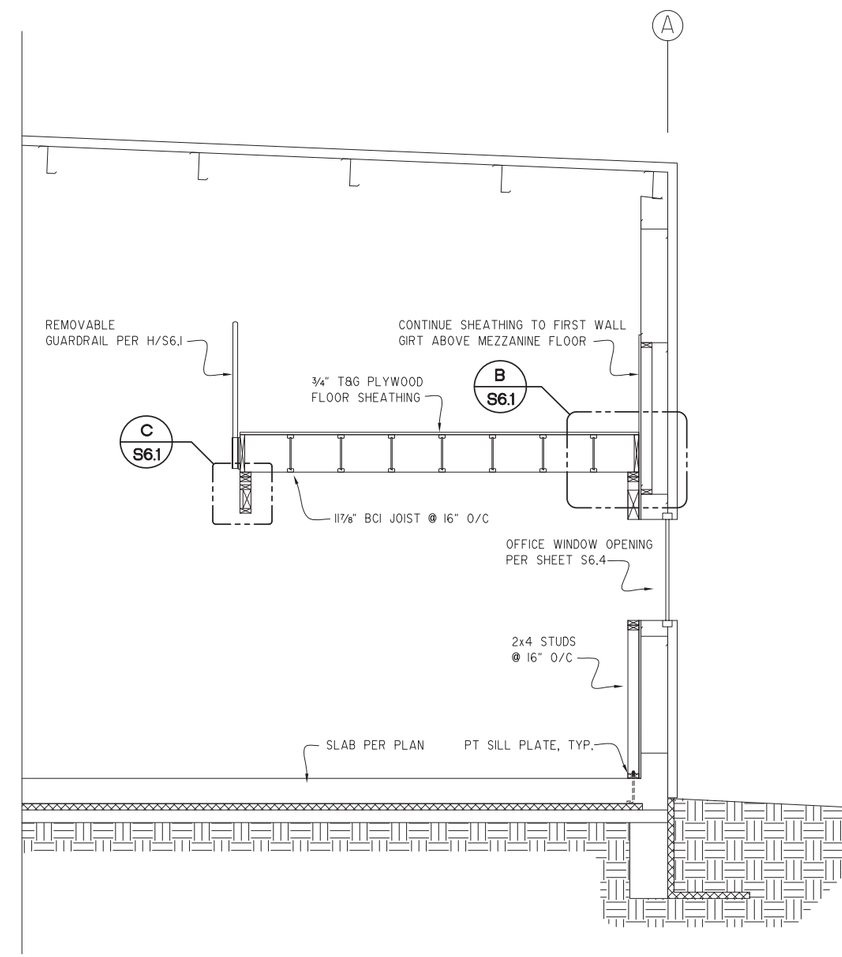

B S2.2 OFFICE SECTION

SCALE: 1/2"=1'-0" (22x34) / 1/4"=1'-0" (11x17)

STATE OF ALASKA 49TH Wilson J. Nelson Registered Professional Engineer 01/15/14

NO.	REVISION	DATE

CONSULTING ENGINEERS
STRUCTURAL/CIVIL
155 BIDARKA ST
KENAI, AK 99611
TEL. (907) 283 - 3583
NELSONENGINEER@ALASKA.NET
NELSON ENGINEERING

HOMER FIRE STATION #2 SKYLINE DRIVE
CITY OF HOMER
HOMER, AK
OFFICE SECTIONS

PROJECT NO. 1359
DRAWN BY: CAM
CHECKED BY: WJN
DATE: 01/15/14
SCALES: NOTED
HORIZ. NOTED
VERT. NOTED
SHEET S2.2
10 OF 21

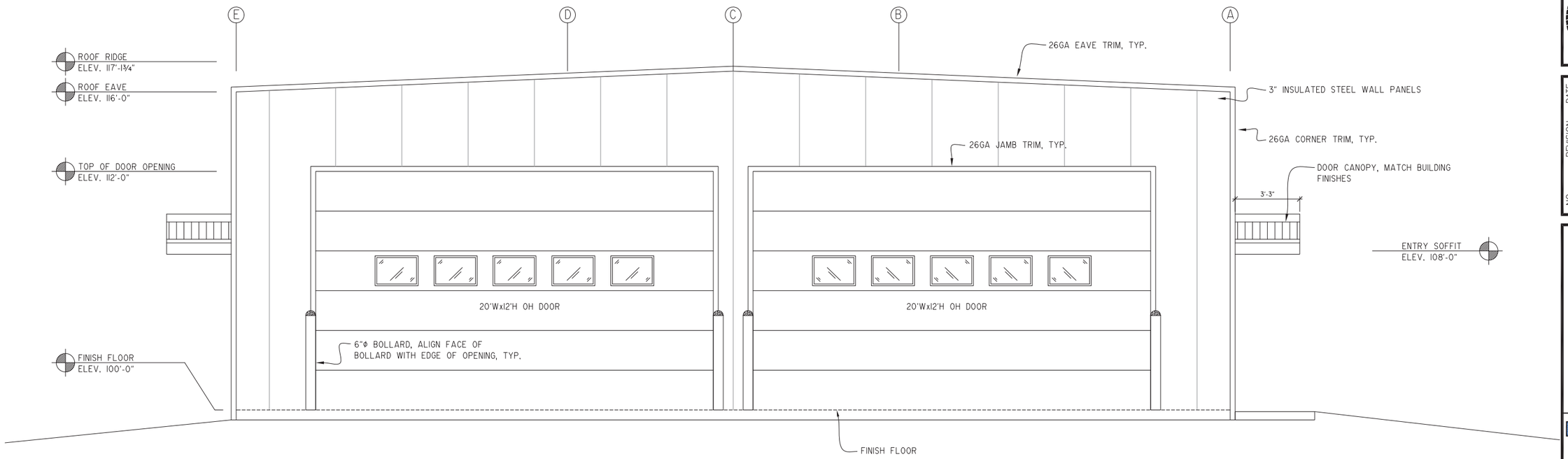

A / S3.1 **SOUTH BUILDING ELEVATION**

SCALE: 3/8"=1'-0" (22x34) / 3/16"=1'-0" (11x17)

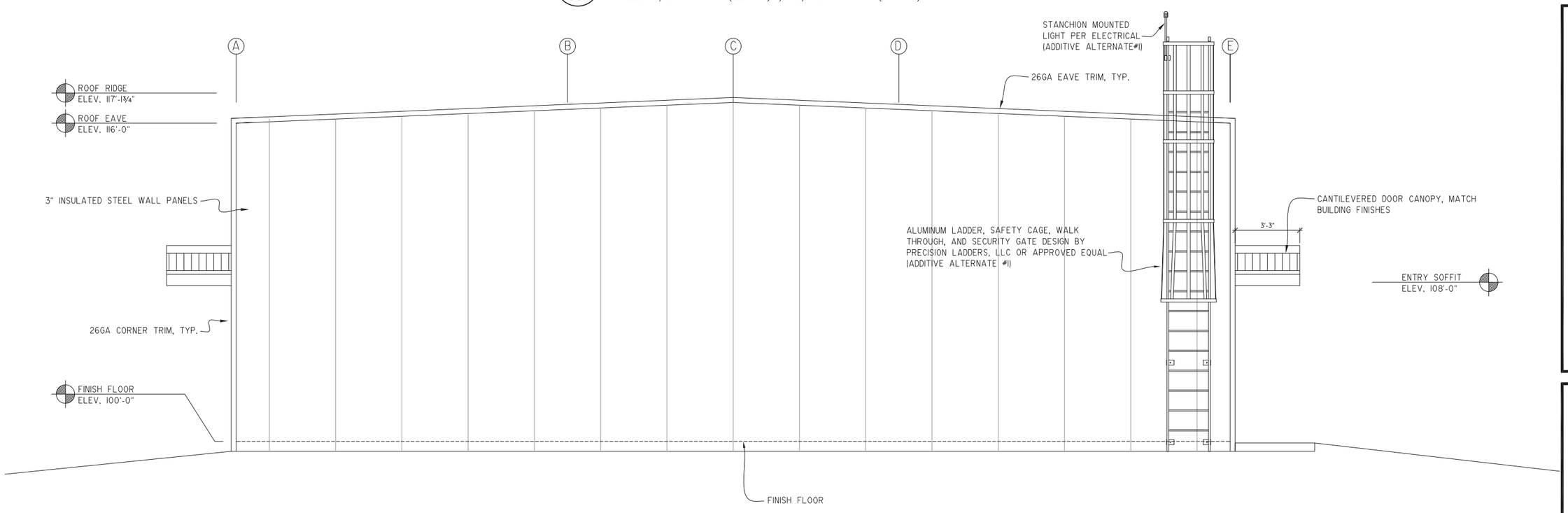

B / S3.1 **NORTH BUILDING ELEVATION**

SCALE: 3/8"=1'-0" (22x34) / 3/16"=1'-0" (11x17)

STATE OF ALASKA 49TH Wilson J. Nelson Jr. 7/15/14 Registered Professional Engineer

NO.	REVISION	DATE

CONSULTING ENGINEERS
STRUCTURAL/CIVIL
155 BIDARKA ST
KENAI, AK 99611
TEL. (907) 283 - 3583
NELSONENGINEER@ALASKA.NET
NELSON ENGINEERING

HOMER FIRE STATION #2 SKYLINE DRIVE

CITY OF HOMER

HOMER, AK

NORTH/SOUTH BUILDING ELEVATIONS

PROJECT NO. 1359

DRAWN BY: CAM

CHECKED BY: WJN

DATE: 01/15/14

SCALES: NOTED

HORIZ. NOTED

VERT. NOTED

SHEET **S3.1**

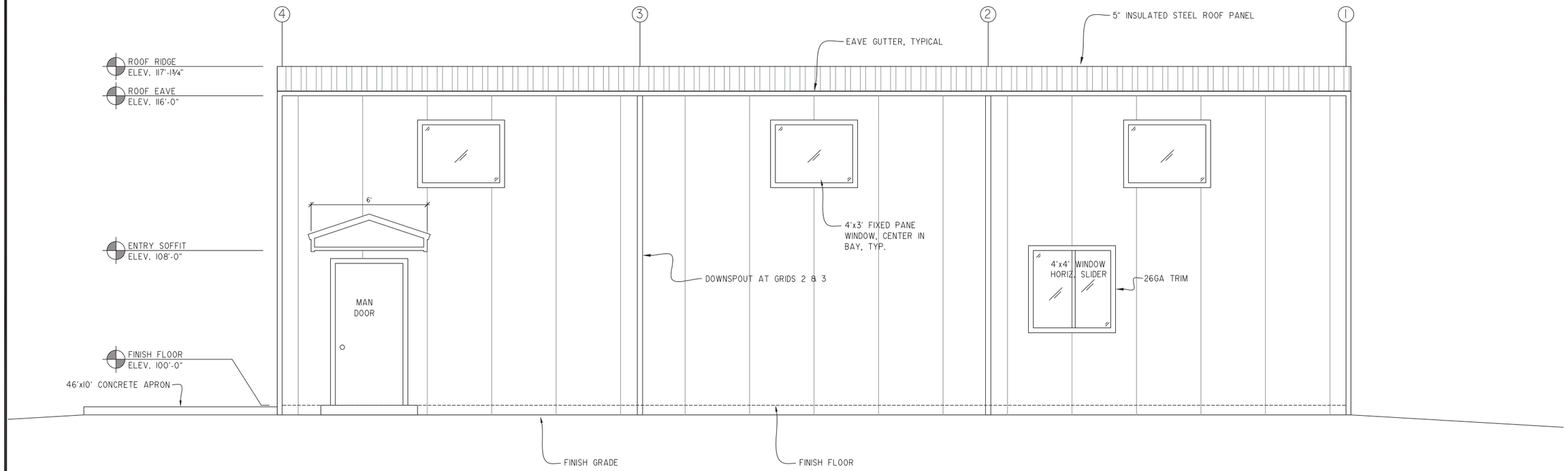

A
S3.2
EAST BUILDING ELEVATION
SCALE: 3/8"=1'-0" (22x34) / 3/16"=1'-0" (11x17)

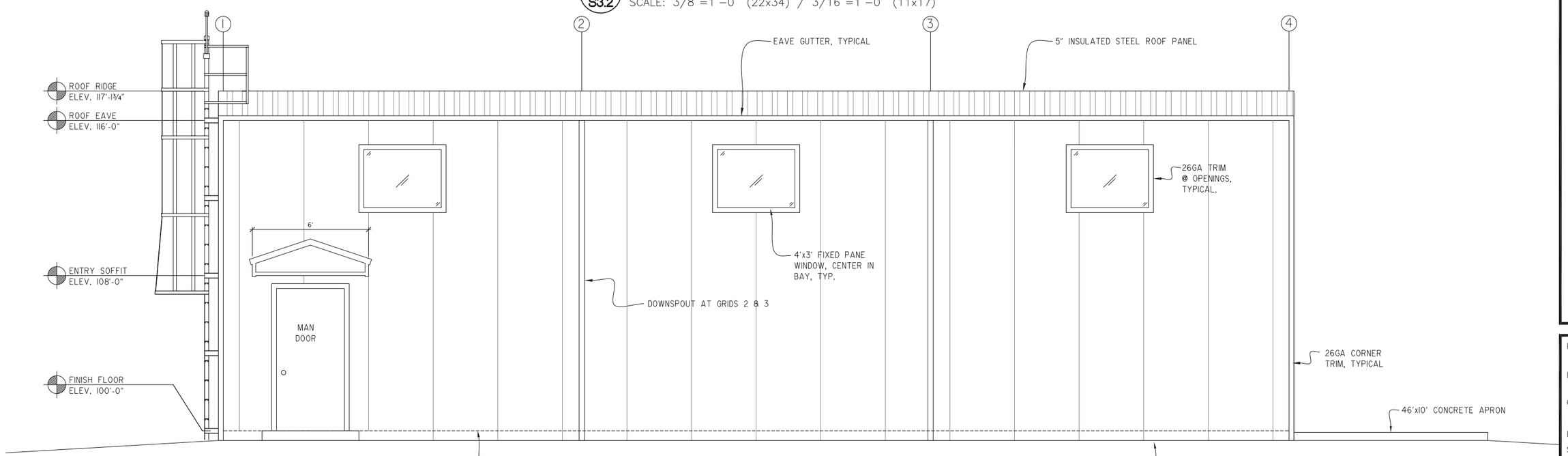

B
S3.2
WEST BUILDING ELEVATION
SCALE: 3/8"=1'-0" (22x34) / 3/16"=1'-0" (11x17)

STATE OF ALASKA
49TH
Wilson J. Nelson
Alaska
01/15/14
Registered Professional Engineer

NO.	REVISION	DATE

CONSULTING ENGINEERS
STRUCTURAL/CIVIL
155 BIDARKA ST
KENAI, AK 99611
TEL. (907) 283 - 3583
NELSONENGINEER@ALASKA.NET
NELSON ENGINEERING

HOMER FIRE STATION #2 SKYLINE DRIVE
CITY OF HOMER
HOMER, AK
EAST/WEST BUILDING ELEVATIONS

PROJECT NO. 1359
DRAWN BY: CAM
CHECKED BY: WJN
DATE: 01/15/14
SCALES: NOTED
HORIZ. NOTED
VERT. NOTED
SHEET S3.2

OPENING SCHEDULE (XXX)

NUMBER	TYPE	SIZE	MATERIAL: DOOR: HOLLOW METAL WELDED	DOOR: OVER HEAD DOOR	DOOR: VINYL WINDOW	DOOR: FIBERGLASS	FRAME: HOLLOW METAL	FRAME: STEEL BY DOOR MFR.	FRAME: VINYL WINDOW	FRAME: POLY-FIBER COMPOSITE	FINISH: FACTORY FINISH	FINISH: PAINT	GLAZING: 1" INSUL'D DBL. GLAZED	GLAZING: PROVIDE TEMPERED GLASS @ HAZARDOUS LOCATIONS	NOTES
101	A	20'W X 12'H		●				●				●		●	NOTES 1,2
102	A	20'W X 12'H		●				●				●		●	NOTES 1,2
103	B	3'W 7'H				●				●		●		●	NOTES 1,2
104	B	3'W 7'H				●				●		●		●	NOTES 1,2
105	D	3'W 7'H	●				●					●		●	NOTES 1,2
106	D	3'W 7'H	●				●					●		●	NOTES 1,2
107	C	3'W 7'H	●				●					●		●	NOTES 1,2
108	1	4'W 4'H			●				●		●		●		NOTES 1
201	2	4'W 3'H			●				●		●		●		NOTES 1
202	2	4'W 3'H			●				●		●		●		NOTES 1
203	2	4'W 3'H			●				●		●		●		NOTES 1
204	2	4'W 3'H			●				●		●		●		NOTES 1
205	2	4'W 3'H			●				●		●		●		NOTES 1
206	2	4'W 3'H			●				●		●		●		NOTES 1
207	2	4'W 3'H			●				●		●		●		NOTES 1
208	2	4'W 3'H			●				●		●		●		NOTES 1
209	2	4'W 3'H			●				●		●		●		NOTES 1
210	2	4'W 3'H			●				●		●		●		NOTES 1
211	2	4'W 3'H			●				●		●		●		NOTES 1
212	2	4'W 3'H			●				●		●		●		NOTES 1

NOTES:
1. FIELD VERIFY SIZES BASED ON ROUGH OPENINGS PRIOR TO ORDER
2. COORDINATE KEYS, LOCKS, & HARDWARE ACCESSORIES WITH OWNERS REP.
3. EXTERIOR WINDOWS ARE DOUBLE PANED.
4. SEE SPECIFICATIONS FOR DOOR HARDWARE SCHEDULE

ROOM FINISH SCHEDULE (XXX)

ROOM #	ROOM NAME	FLOOR: SEALED CONC. SLAB	FLOOR: PLYWOOD, PAINTED	BASE: NO BASE	BASE: 4" RESILIENT BASE	BASE: VINYL WINDOW	WALLS: GYPSUM BOARD, PAINTED	WALLS: MTL. BLDG. WALL PNL.	WALLS: GYP. BOARD & FRP PANELS	CEILING: SUSP. AC TILE & GRID	CEILING: PAINTED GYPSUM BOARD	CEILING: EXPOSED STRUCTURE	CLG HT: 8'-1"	CLG HT: B.O. ROOF DECK	NOTES
101	MECH./ELEC.	●			●		●				●		●		
102	OFFICE	●			●		●				●		●		
103	BATHROOM	●			●				●		●		●		
104	GARAGE	●		●				●				●		●	
201	MEZZANINE		●	●				●				●		●	

NOTES:
1. GYPSUM BOARD TO HAVE ORANGE PEEL TEXTURE WITH RADIUS STYLE CORNER BEAD
2. PROVIDE WATER RESISTANT GYPSUM BOARD WITH FULL HEIGHT ADHESIVE APPLIED FRP PANELS FOR ALL FOUR WALLS IN THE BATHROOM.

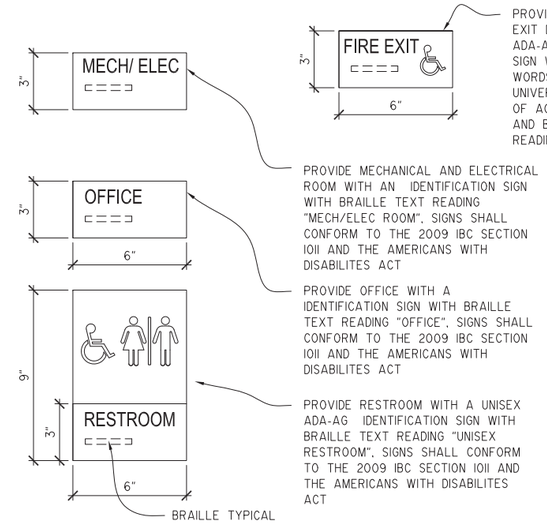

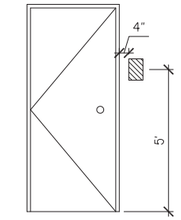

SIGN POSITION

NOTES:
SIGNS SHALL CONFORM TO THE 2009 IBC SECTION 1011 AND THE AMERICANS WITH DISABILITES ACT

SIGNS SHALL BE MOUNTED 60" ABOVE FINISH FLOOR AND SHALL BE MOUNTED ON THE WALL ADJACENT TO THE LATCH SIDE OF THE DOOR.

3/4" HIGH, UPPER CASE, PROVIDE LEVEL 2 BRAILLE, NON GLARE FINISH, LETTERS TO CONTRAST WITH BACKGROUND COLOR.

CONTRACTOR TO SUBMIT SIGNAGE PACKAGE FOR REVIEW TO OWNERS REPRESENTATIVE. CONTRACTOR TO VERIFY SIGNAGE LOCATIONS WITH OWNERS REPRESENTATIVE.

B / S4.1 TYPICAL SIGNAGE DETAILS

SCALE: NO SCALE

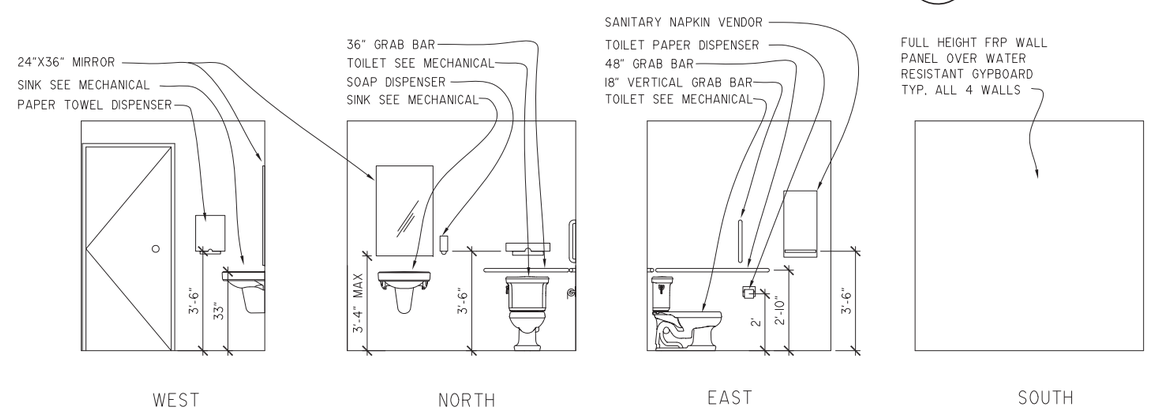

NOTE:
PROVIDE BLOCKING IN FRAMED WALL TO MOUNT ALL HARDWARE AND ACCESSORIES

SEE SPECIFICATIONS FOR BATHROOM ACCESSORIES SCHEDULE

A / S4.1 RESTROOM INTERIOR ELEVATIONS

SCALE: NO SCALE

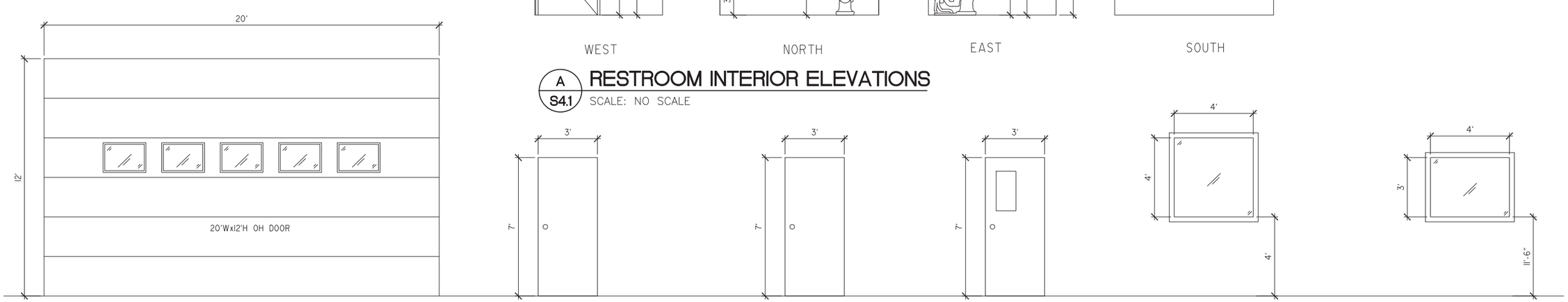

TYPE 'A':
OVERHEAD DOOR (20'Wx12'H)
BASIS OF DESIGN: SLATTED DOOR WITH WINDOWS WITH OVERHEAD RAIL MOUNTS

TYPE 'B':
EXTERIOR MAN DOOR (3'Wx7'H)
BASIS OF DESIGN: COMPOSITE FRAMED DOOR WITH FLUSH H.M.

TYPE 'C':
INTERIOR MAN DOOR (3'Wx7'H)
BASIS OF DESIGN: STEEL FRAMED DOOR WITH FLUSH H.M.

TYPE 'D':
INTERIOR MAN DOOR (3'Wx7'H)
BASIS OF DESIGN: STEEL FRAMED DOOR WITH FLUSH 1'x2' LITE IN DOOR

TYPE '1':
EXTERIOR WINDOW (4'Wx4'H)
VINYL FRAME, BROWN

TYPE '2':
EXTERIOR WINDOW (4'Wx3'H)
VINYL FRAME, BROWN

C / S4.1 DOOR AND WINDOW TYPES

SCALE: NO SCALE

NO.	REVISION	DATE

CONSULTING ENGINEERS
STRUCTURAL/CIVIL
155 BIDARKA ST
KENAI, AK 99611
TEL. (907) 283 - 3583
NELSONENGINEER@ALASKA.NET
NELSON ENGINEERING

HOMER FIRE STATION #2 SKYLINE DRIVE
CITY OF HOMER
HOMER, AK
FINISH SCHEDULE AND TYPES

PROJECT NO. 1359
DRAWN BY: CAM
CHECKED BY: WJN
DATE: 01/15/14
SCALES: NOTED
HORIZ. NOTED
VERT. NOTED
SHEET S4.1
13 OF 21

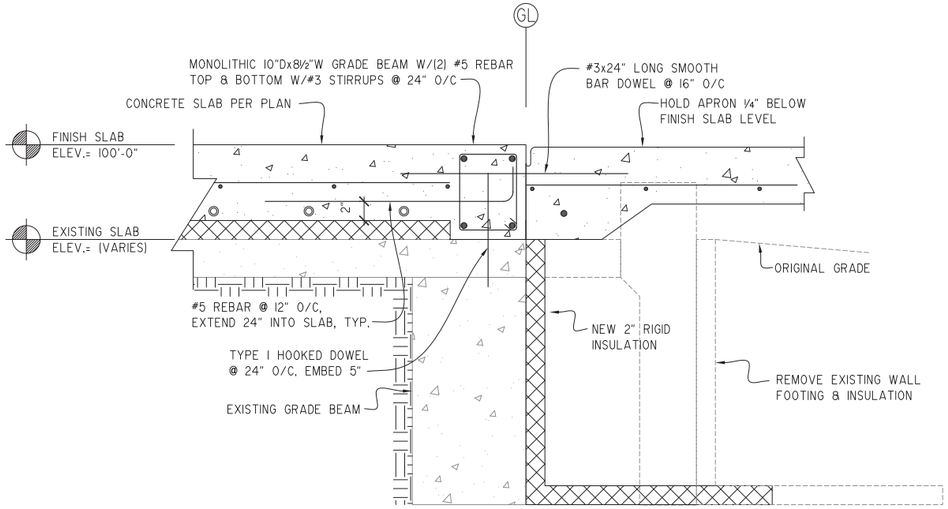

A S5.1 SOUTH WALL FOOTING @ THRESHOLD

SCALE: 1-1/2"=1'-0" (22x34) / 3/4"=1'-0" (11x17)

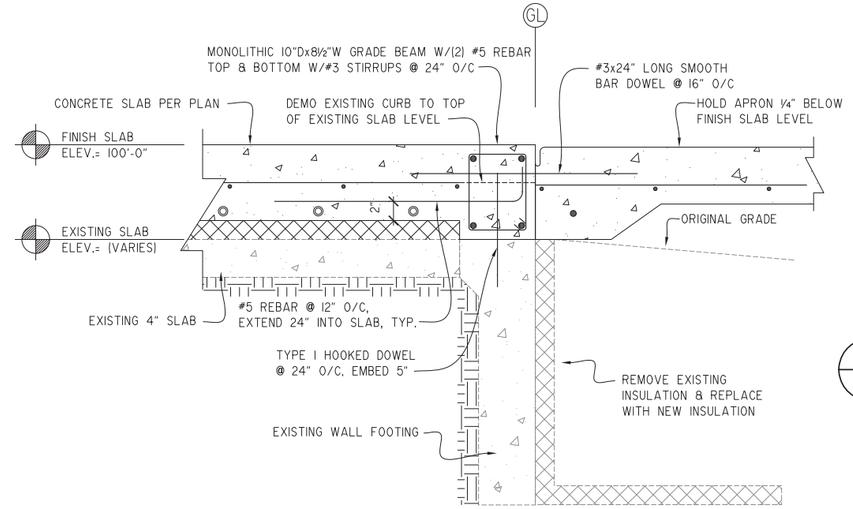

B S5.1 EAST/WEST WALL FOOTING @ THRESHOLD

SCALE: 1-1/2"=1'-0" (22x34) / 3/4"=1'-0" (11x17)

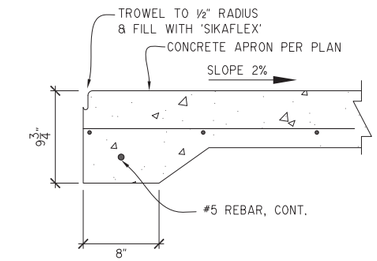

E S5.1 EXT. SLAB THICKENED EDGE

SCALE: 1-1/2"=1'-0" (22x34) / 3/4"=1'-0" (11x17)

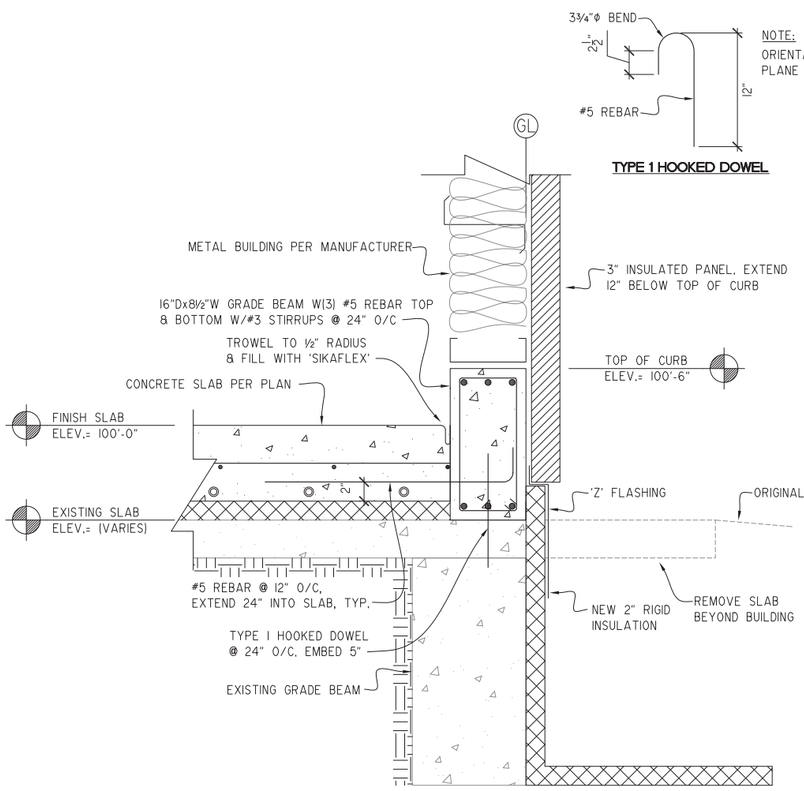

C S5.1 NORTH/SOUTH WALL FOOTING

SCALE: 1-1/2"=1'-0" (22x34) / 3/4"=1'-0" (11x17)

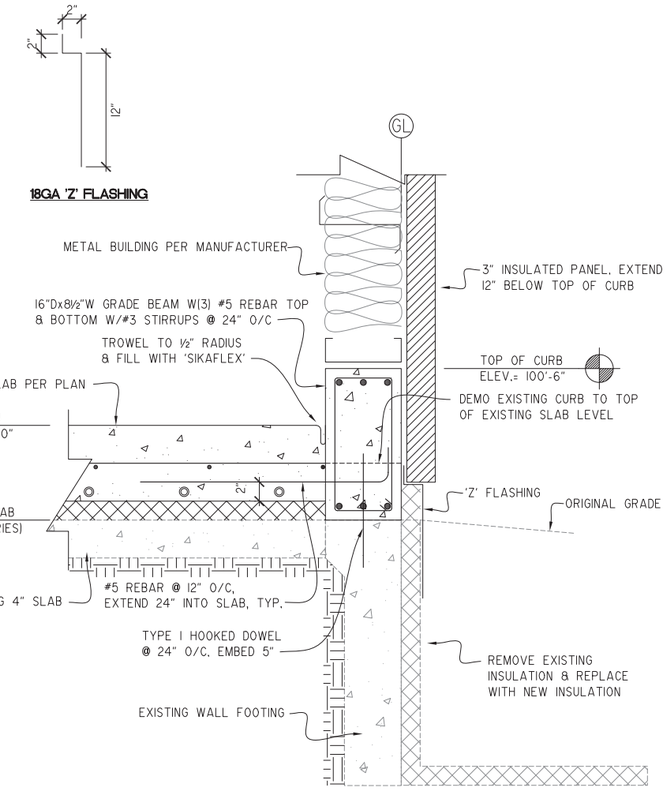

D S5.1 EAST/WEST WALL FOOTING

SCALE: 1-1/2"=1'-0" (22x34) / 3/4"=1'-0" (11x17)

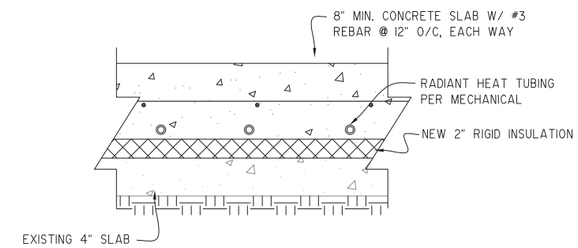

F S5.1 NEW SLAB DETAIL

SCALE: 1-1/2"=1'-0" (22x34) / 3/4"=1'-0" (11x17)

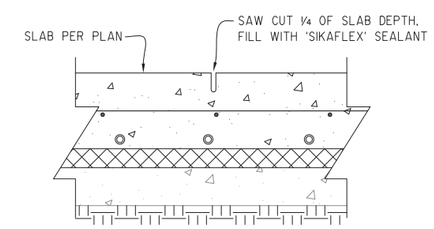

G S5.1 TYP. CONTROL JOINT

SCALE: 1-1/2"=1'-0" (22x34) / 3/4"=1'-0" (11x17)

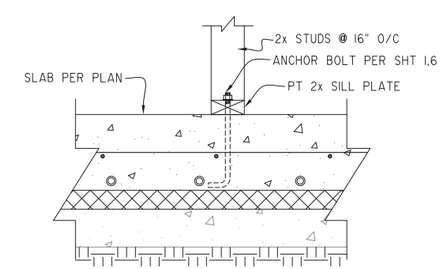

H S5.1 INT. WALL ANCHOR BOLT

SCALE: 1-1/2"=1'-0" (22x34) / 3/4"=1'-0" (11x17)

STATE OF ALASKA 49TH Wilson J. Nelson Jr. 7/15/14 Registered Professional Engineer

NO.	REVISION	DATE

CONSULTING ENGINEERS
STRUCTURAL/CIVIL
155 BIDARKA ST
KENAI, AK 99611
TEL. (907) 283 - 3583
NELSONENGINEER@ALASKA.NET
NELSON ENGINEERING

HOMER FIRE STATION #2 SKYLINE DRIVE
CITY OF HOMER
HOMER, AK
FOUNDATION DETAILS

PROJECT NO. 1359
DRAWN BY: CAM
CHECKED BY: WJN
DATE: 01/15/14
SCALES: NOTED
HORIZ. NOTED
VERT. NOTED
SHEET S5.1

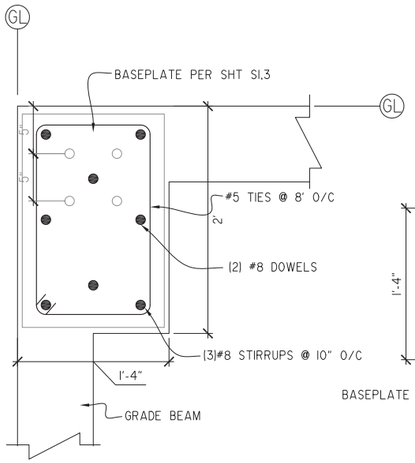

SECTION AA AT CORNER

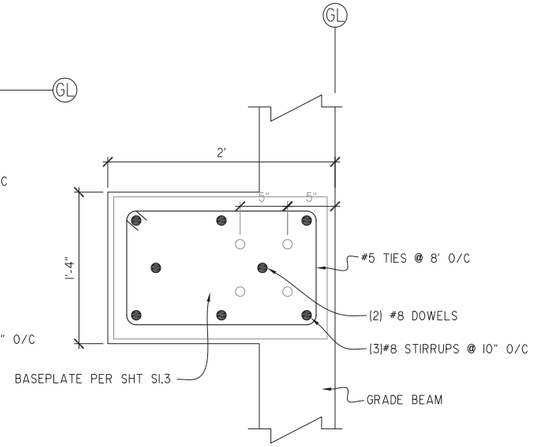

SECTION AA

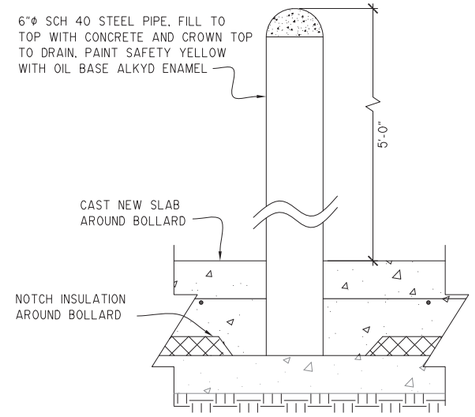

INTERIOR CONDITION

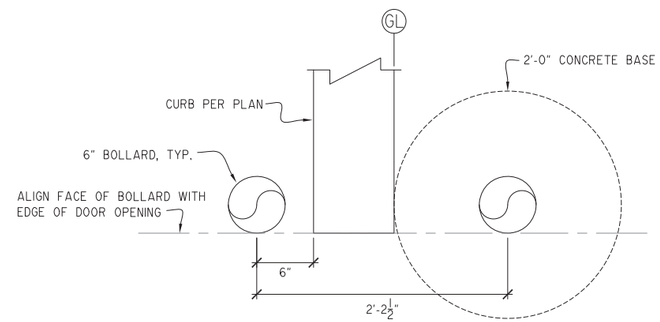

PLAN VIEW

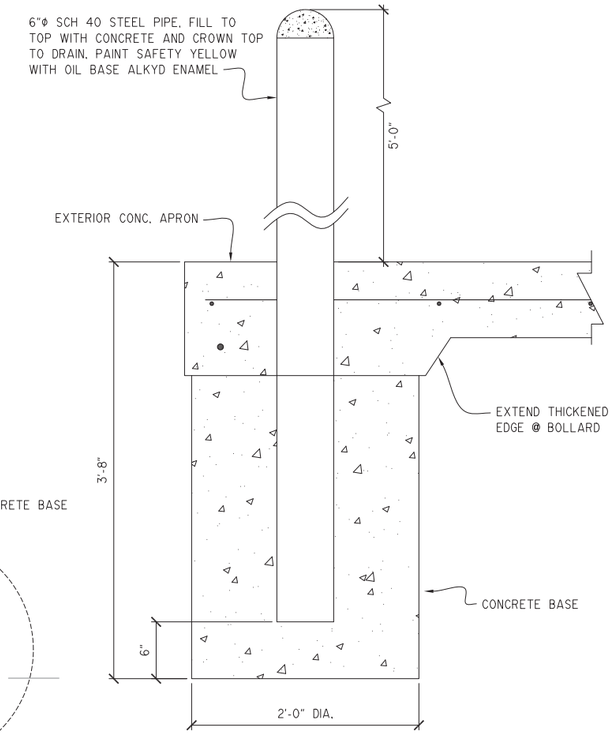

EXTERIOR CONDITION

B / S5.2 BOLLARD DETAILS

SCALE: 1-1/2"=1'-0" (22x34) / 3/4"=1'-0" (11x17)

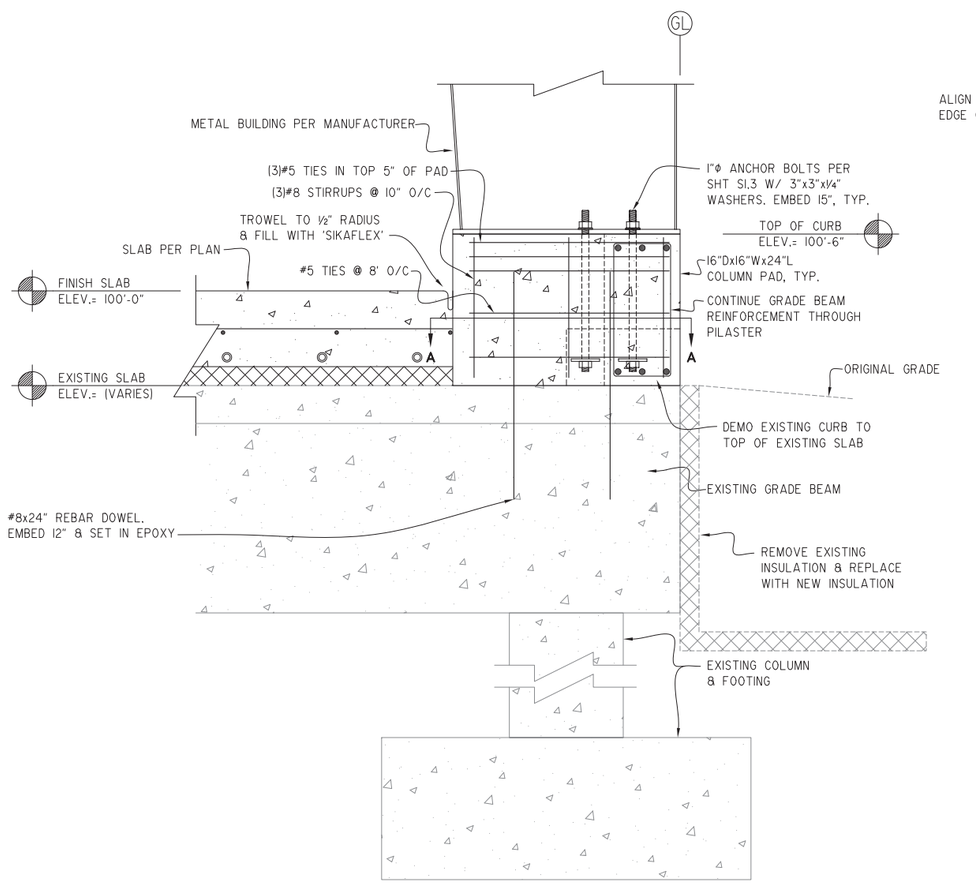

A / S5.2 TYPICAL COLUMN BEARING PAD

SCALE: 1-1/2"=1'-0" (22x34) / 3/4"=1'-0" (11x17)

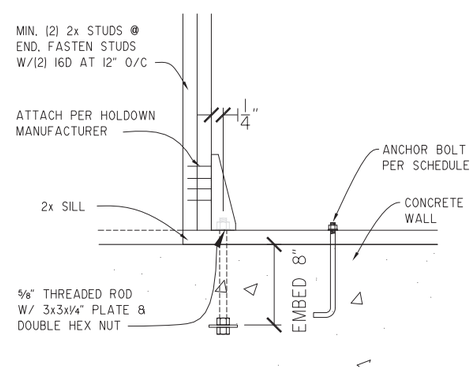

C / S5.2 TYPICAL HOLDOWN DETAIL

SCALE: 1-1/2"=1'-0" (22x34) / 3/4"=1'-0" (11x17)

STATE OF ALASKA 49TH Wilson J. Nelson Registered Professional Engineer 1/15/14

NO.	REVISION	DATE

CONSULTING ENGINEERS
STRUCTURAL/CIVIL
155 BIDARKA ST
KENAI, AK 99611
TEL. (907) 283 - 3583
NELSONENGINEER@ALASKA.NET
NELSON ENGINEERING

HOMER FIRE STATION #2 SKYLINE DRIVE
CITY OF HOMER
HOMER, AK
FOUNDATION DETAILS

PROJECT NO. 1359
DRAWN BY: CAM
CHECKED BY: WJN
DATE: 01/15/14
SCALES: NOTED
HORIZ. NOTED
VERT. NOTED
SHEET S5.2

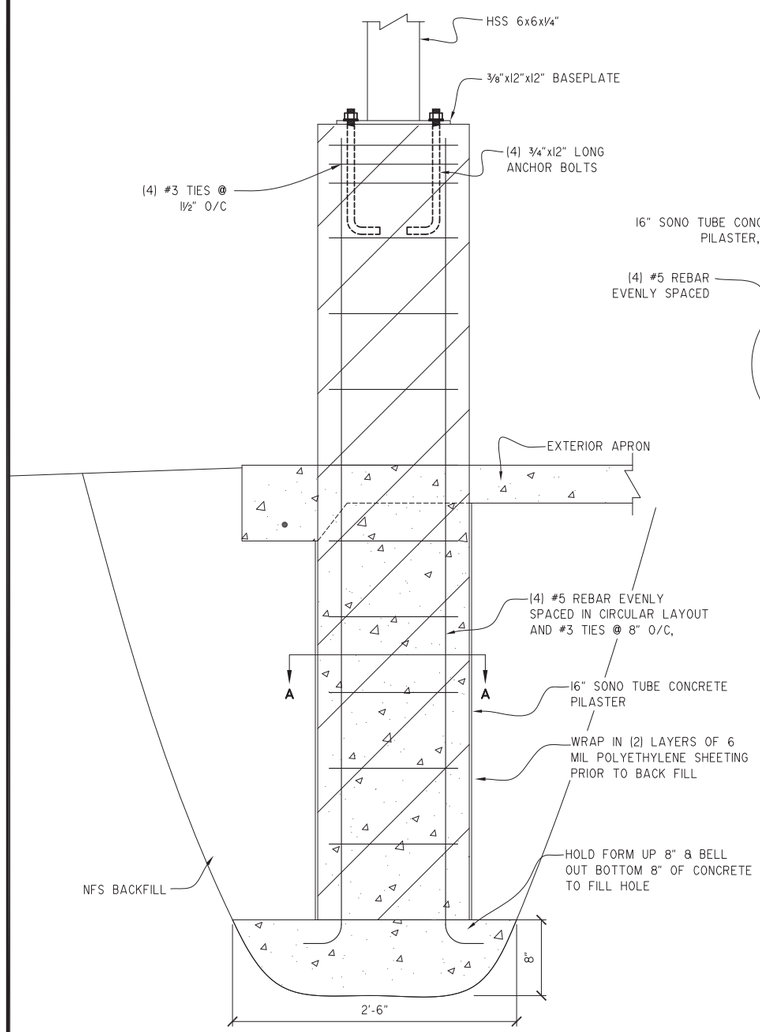

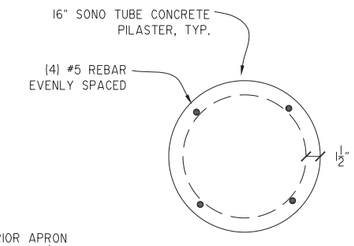

SECTION AA

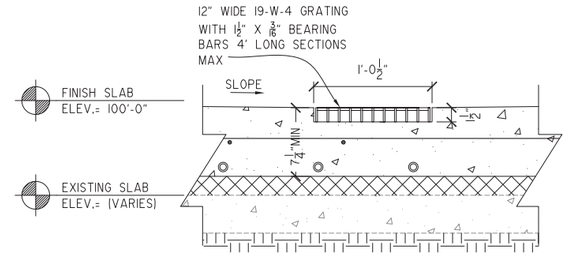

B / S5.3 TYPICAL EVAPORATIVE TRENCH DETAIL

SCALE: 1-1/2"=1'-0" (22x34) / 3/4"=1'-0" (11x17)

A / S5.3 TYPICAL COLUMN BASE DETAIL

SCALE: 1-1/2"=1'-0" (22x34) / 3/4"=1'-0" (11x17)

STATE OF ALASKA 49TH Wilson J. Nelson 12-1490 Registered Professional 01/15/14

NO.	REVISION	DATE

CONSULTING ENGINEERS
STRUCTURAL/CIVIL
155 BIDARKA ST
KENAI, AK 99611
TEL. (907) 283 - 3583
NELSONENGINEER@ALASKA.NET
NELSON ENGINEERING

HOMER FIRE STATION #2 SKYLINE DRIVE
CITY OF HOMER
HOMER, AK
FOUNDATION DETAILS

PROJECT NO. 1359
DRAWN BY: CAM
CHECKED BY: WJN
DATE: 01/15/14
SCALES: NOTED
HORIZ. NOTED
VERT. NOTED
SHEET S5.3

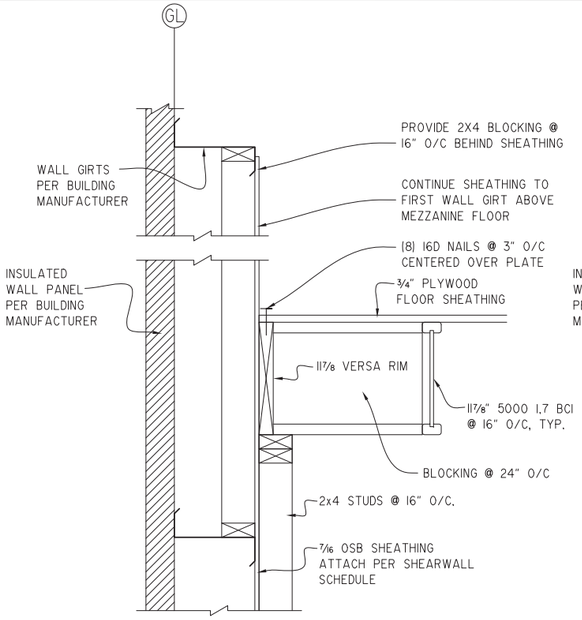

A S6.1 TYP. BLOCKING BEARING @ WALL

SCALE: 1-1/2"=1'-0" (22x34) / 3/4"=1'-0" (11x17)

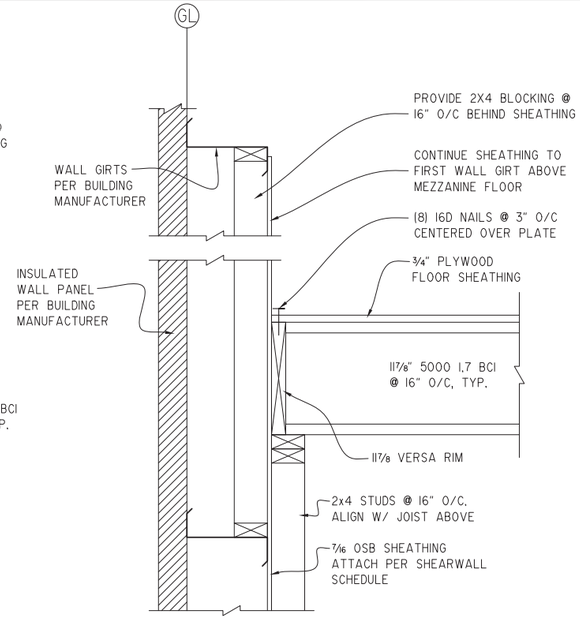

B S6.1 TYP. JOIST BEARING @ WALL

SCALE: 1-1/2"=1'-0" (22x34) / 3/4"=1'-0" (11x17)

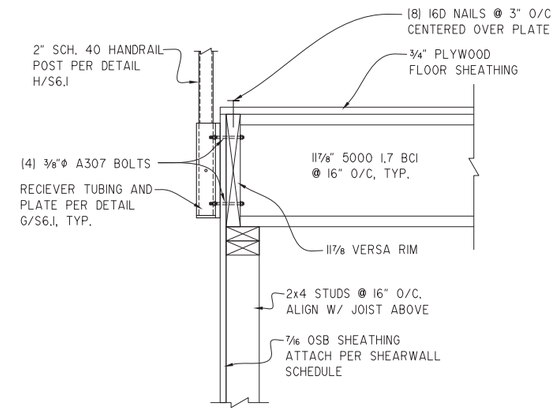

C S6.1 TYP. JOIST BEARING @ EAVE

SCALE: 1-1/2"=1'-0" (22x34) / 3/4"=1'-0" (11x17)

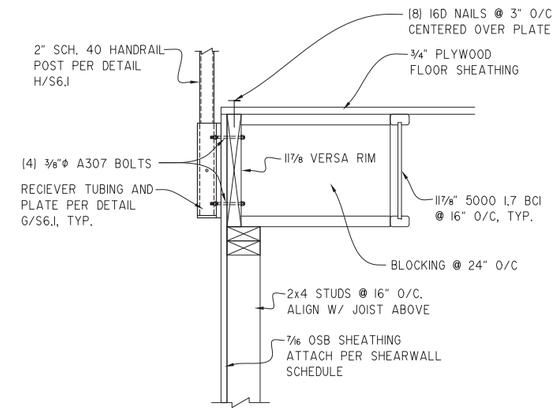

D S6.1 TYP. BLOCKING BEARING @ EAVE

SCALE: 1-1/2"=1'-0" (22x34) / 3/4"=1'-0" (11x17)

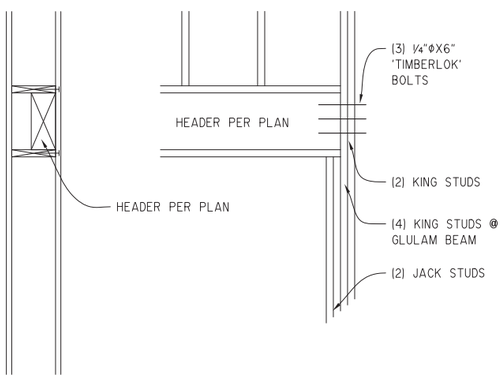

E S6.1 TYP. HEADER DETAIL

SCALE: 1-1/2"=1'-0" (22x34) / 3/4"=1'-0" (11x17)

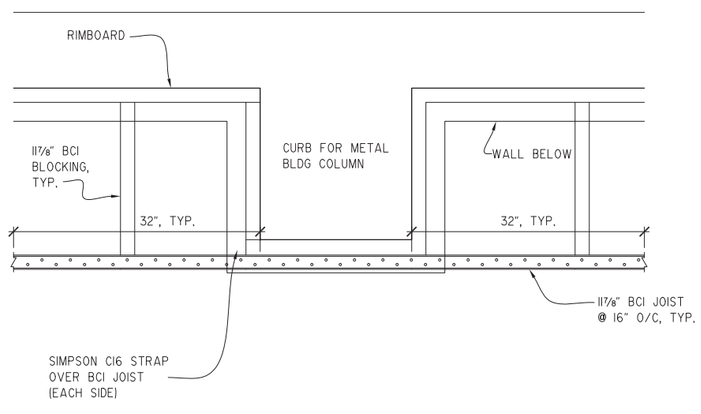

F S6.1 BLOCKING @ METAL BLDG COLUMN

SCALE: 1-1/2"=1'-0" (22x34) / 3/4"=1'-0" (11x17)

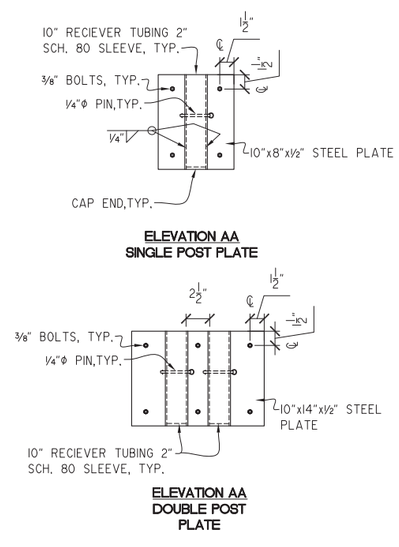

G S6.1 HANDRAIL CONNECTION PLATE

SCALE: 1-1/2"=1'-0" (22x34) / 3/4"=1'-0" (11x17)

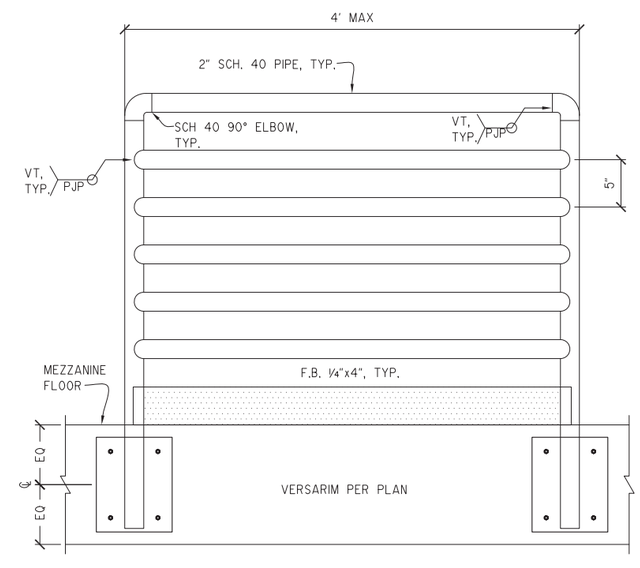

H S6.1 HANDRAIL DETAIL

SCALE: 1-1/2"=1'-0" (22x34) / 3/4"=1'-0" (11x17)

STATE OF ALASKA 49TH Wilson J. Nelson Registered Professional Engineer 01/15/14

NO.	REVISION	DATE

CONSULTING ENGINEERS
STRUCTURAL/CIVIL
155 BIDARKA ST
KENAI, AK 99611
TEL. (907) 283 - 3583
NELSONENGINEER@ALASKA.NET
NELSON ENGINEERING

HOMER FIRE STATION #2 SKYLINE DRIVE
CITY OF HOMER
HOMER, AK
WOOD FRAMING DETAILS

PROJECT NO. 1359
DRAWN BY: CAM
CHECKED BY: WJN
DATE: 01/15/14
SCALES: NOTED
HORIZ. NOTED
VERT. NOTED
SHEET S6.1

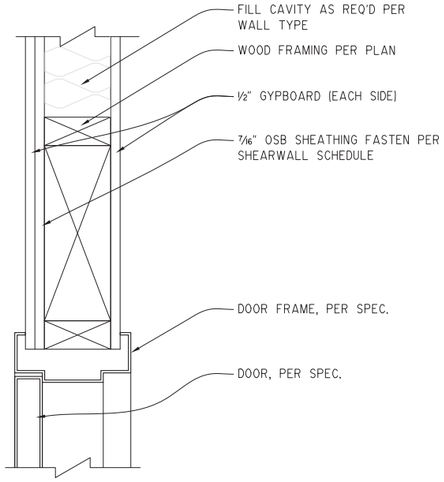

A / S6.2 DOOR HEAD DETAIL @ INTERIOR WALL

SCALE: 3"=1'-0" (22x34) / 1-1/2"=1'-0" (11x17)

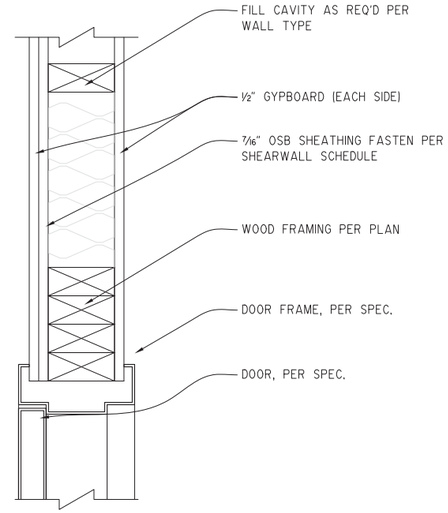

B / S6.2 DOOR JAMB DETAIL @ INTERIOR WALL

SCALE: 3"=1'-0" (22x34) / 1-1/2"=1'-0" (11x17)

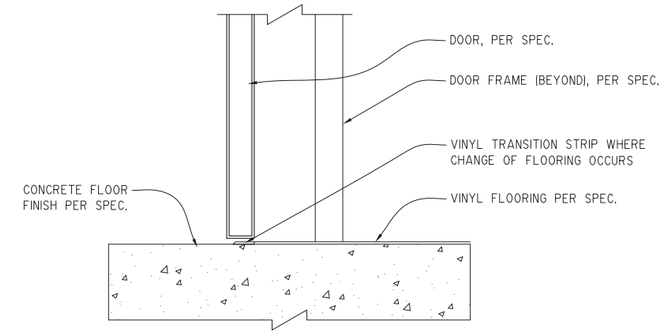

C / S6.2 DOOR SILL DETAIL @ INTERIOR WALL

SCALE: 3"=1'-0" (22x34) / 1-1/2"=1'-0" (11x17)

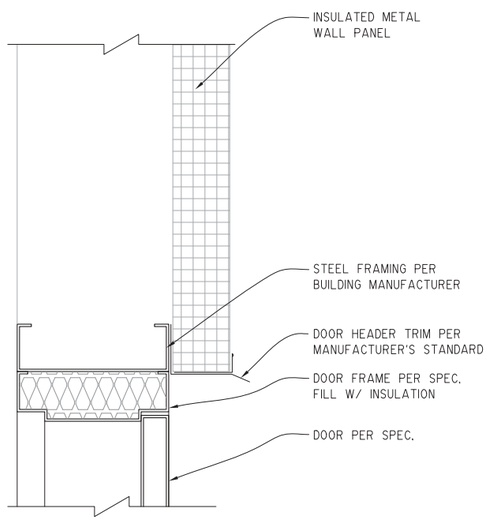

D / S6.2 DOOR HEAD DETAIL @ EXT. WALL

SCALE: 3"=1'-0" (22x34) / 1-1/2"=1'-0" (11x17)

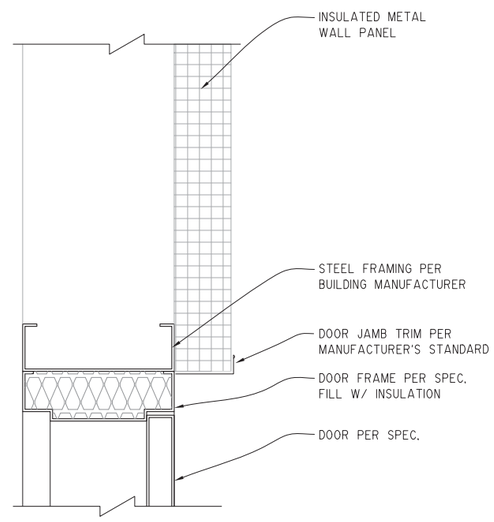

E / S6.2 DOOR JAMB DETAIL @ EXT. WALL

SCALE: 3"=1'-0" (22x34) / 1-1/2"=1'-0" (11x17)

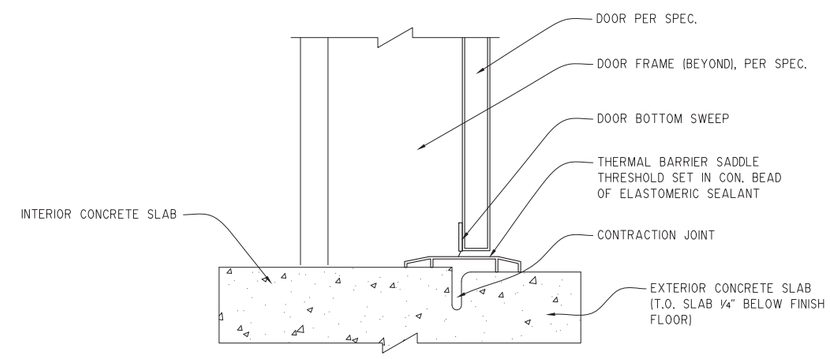

F / S6.2 DOOR SILL DETAIL @ EXT. WALL

SCALE: 3"=1'-0" (22x34) / 1-1/2"=1'-0" (11x17)

STATE OF ALASKA 49TH Wilson J. Nelson Jr. 8/456 01/15/14 Registered Professional Engineer

NO.	REVISION	DATE

CONSULTING ENGINEERS
STRUCTURAL/CIVIL
155 BIDARKA ST
KENAI, AK 99611
TEL. (907) 283 - 3583
NELSONENGINEER@ALASKA.NET
NELSON ENGINEERING

HOMER FIRE STATION #2 SKYLINE DRIVE
CITY OF HOMER
HOMER, AK
DOOR DETAILS

PROJECT NO. 1359
DRAWN BY: CAM
CHECKED BY: WJN
DATE: 01/15/14
SCALES: NOTED
HORIZ. NOTED
VERT. NOTED
SHEET S6.2

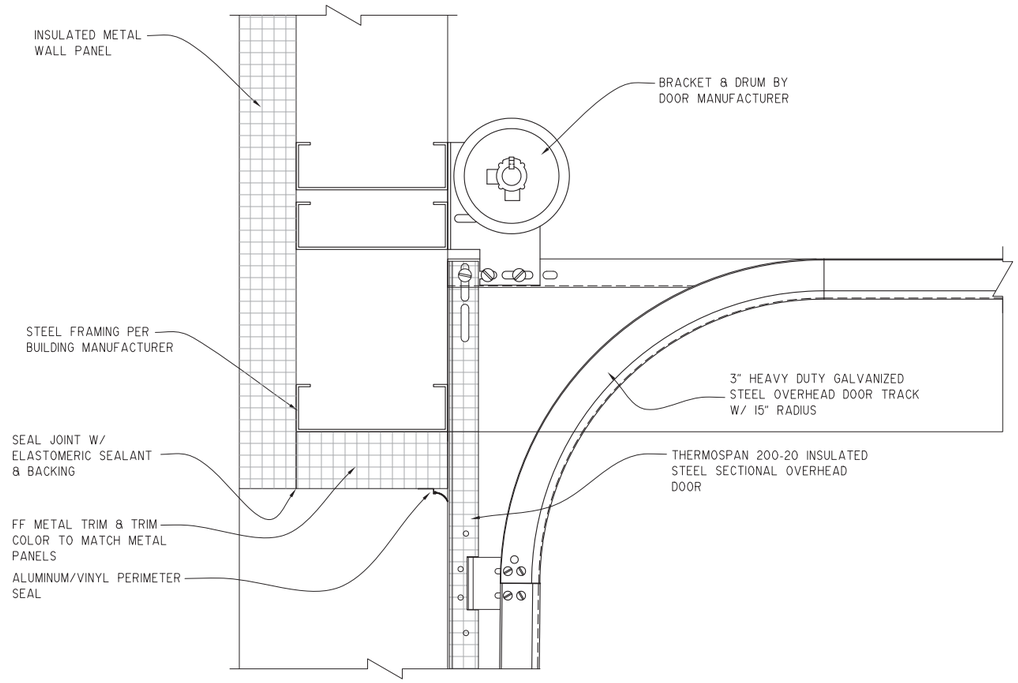

A / S6.3 HEAD DETAIL- OVERHEAD DOOR

SCALE: 3"=1'-0" (22x34) / 1-1/2"=1'-0" (11x17)

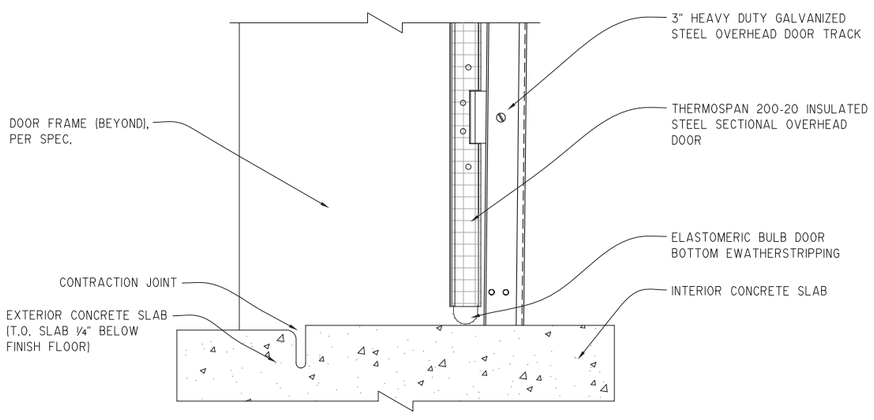

B / S6.3 SILL DETAIL- OVERHEAD DOOR

SCALE: 3"=1'-0" (22x34) / 1-1/2"=1'-0" (11x17)

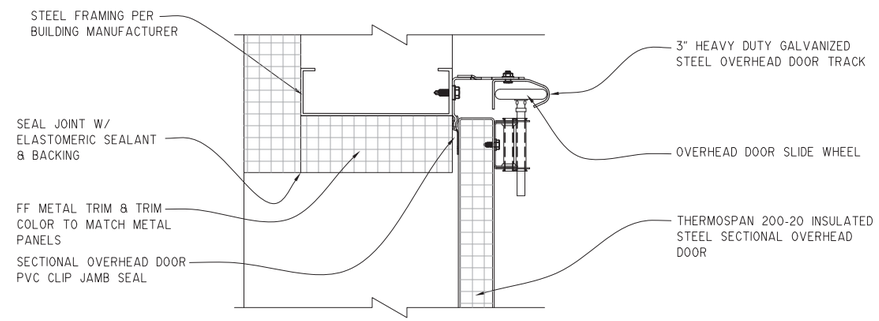

C / S6.3 JAMB DETAIL- OVERHEAD DOOR

SCALE: 3"=1'-0" (22x34) / 1-1/2"=1'-0" (11x17)

STATE OF ALASKA 49TH Wilson J. Nelson Jr. 6746 Registered Professional 01/15/14

NO.	REVISION	DATE

CONSULTING ENGINEERS
STRUCTURAL/CIVIL
155 BIDARKA ST
KENAI, AK 99611
TEL. (907) 283 - 3583
NELSONENGINEER@ALASKA.NET
NELSON ENGINEERING

HOMER FIRE STATION #2 SKYLINE DRIVE

CITY OF HOMER
HOMER, AK
DOOR DETAILS

PROJECT NO. 1359
DRAWN BY: CAM
CHECKED BY: WJN
DATE: 01/15/14
SCALES: NOTED
HORIZ. NOTED
VERT. NOTED
SHEET S6.3

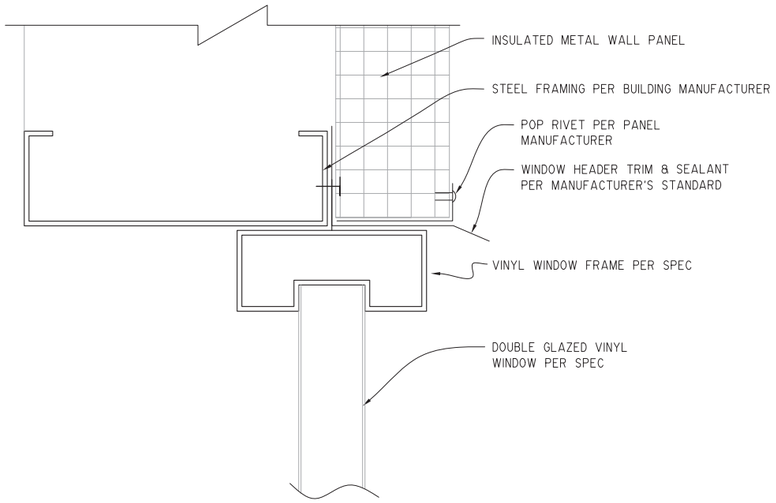

A S6.4 **WINDOW HEAD DETAIL @ EXT. WALL**
SCALE: 6"=1'-0" (22x34) / 3"=1'-0" (11x17)

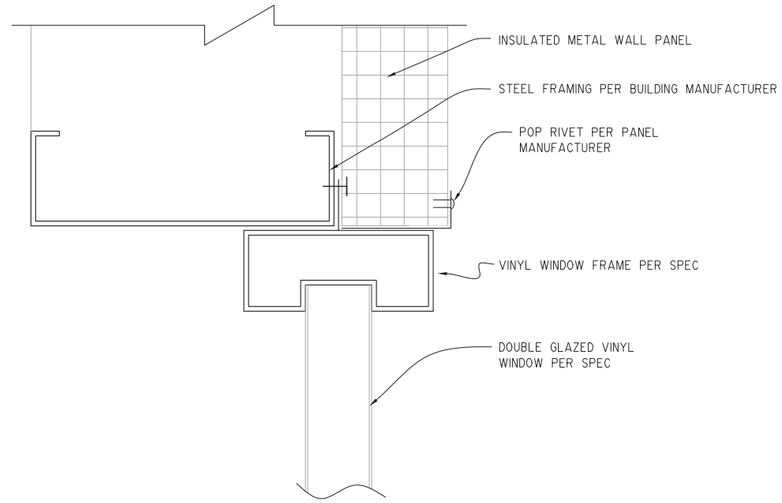

B S6.4 **WINDOW JAMB DETAIL @ EXT. WALL**
SCALE: 6"=1'-0" (22x34) / 3"=1'-0" (11x17)

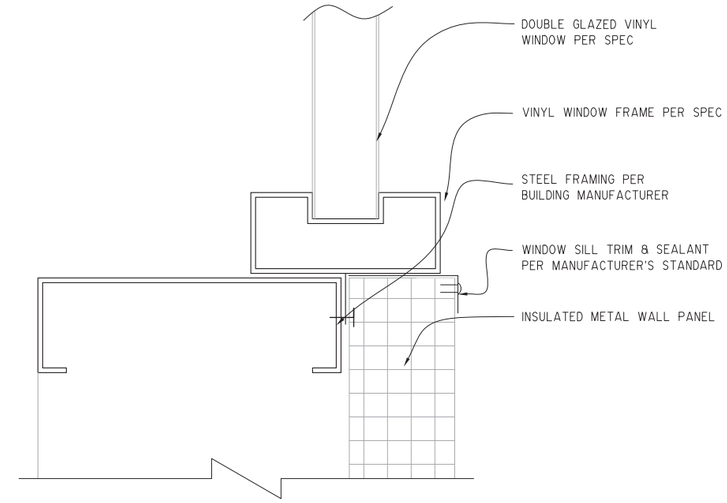

C S6.4 **WINDOW SILL DETAIL @ EXT. WALL**
SCALE: 6"=1'-0" (22x34) / 3"=1'-0" (11x17)

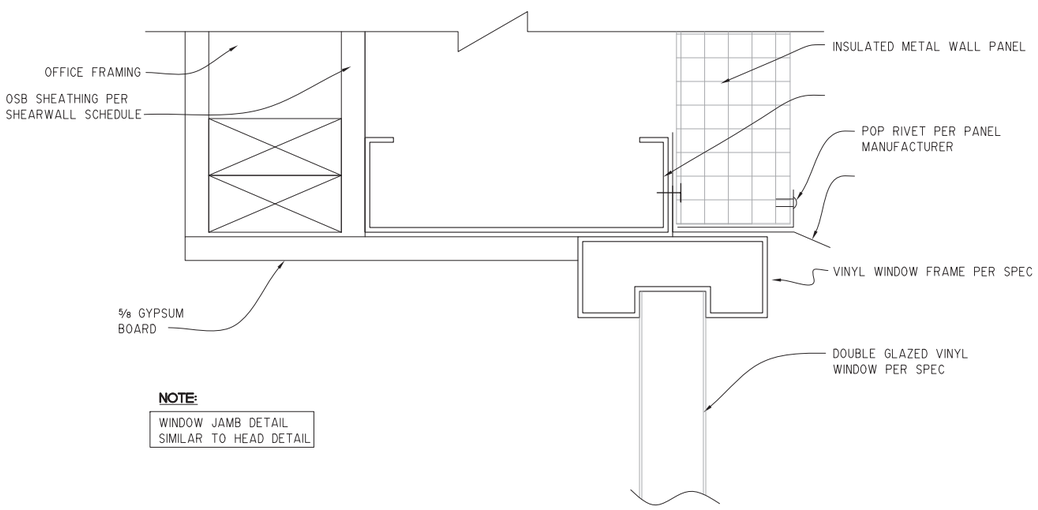

NOTE:
WINDOW JAMB DETAIL SIMILAR TO HEAD DETAIL

C S6.4 **WINDOW HEAD DETAIL @ OFFICE WALL**
SCALE: 6"=1'-0" (22x34) / 3"=1'-0" (11x17)

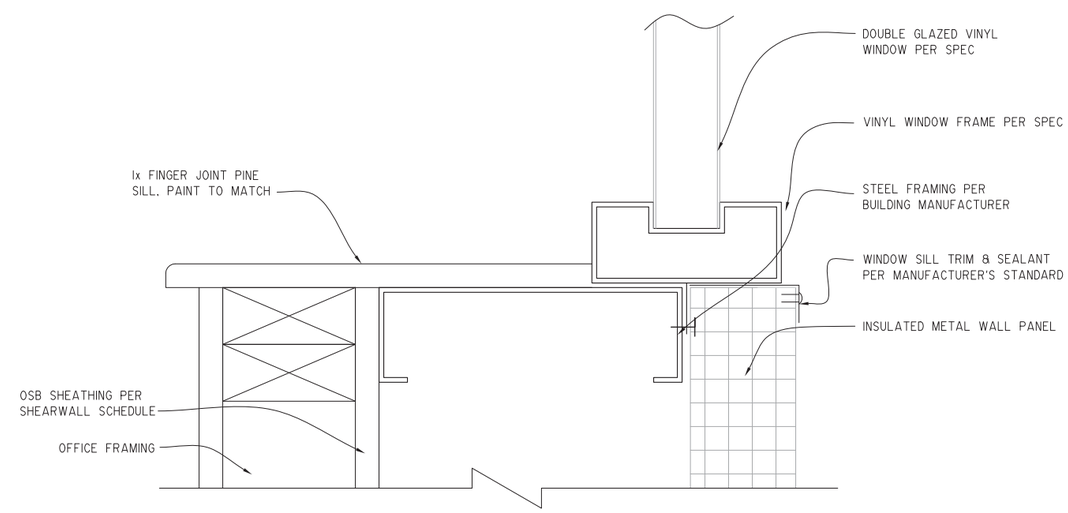

D S6.4 **WINDOW SILL DETAIL @ OFFICE WALL**
SCALE: 6"=1'-0" (22x34) / 3"=1'-0" (11x17)

STATE OF ALASKA 49TH Wilson J. Nelson Jr. 01/15/14 Registered Professional Engineer

NO.	REVISION	DATE

CONSULTING ENGINEERS
STRUCTURAL/CIVIL
155 BIDARKA ST
KENAI, AK 99611
TEL. (907) 283 - 3583
NELSONENGINEER@ALASKA.NET
NELSON ENGINEERING

HOMER FIRE STATION #2 SKYLINE DRIVE
CITY OF HOMER
HOMER, AK
WINDOW DETAILS

PROJECT NO. 1359
DRAWN BY: CAM
CHECKED BY: WJN
DATE: 01/15/14
SCALES: NOTED
HORIZ. NOTED
VERT. NOTED
SHEET S6.4

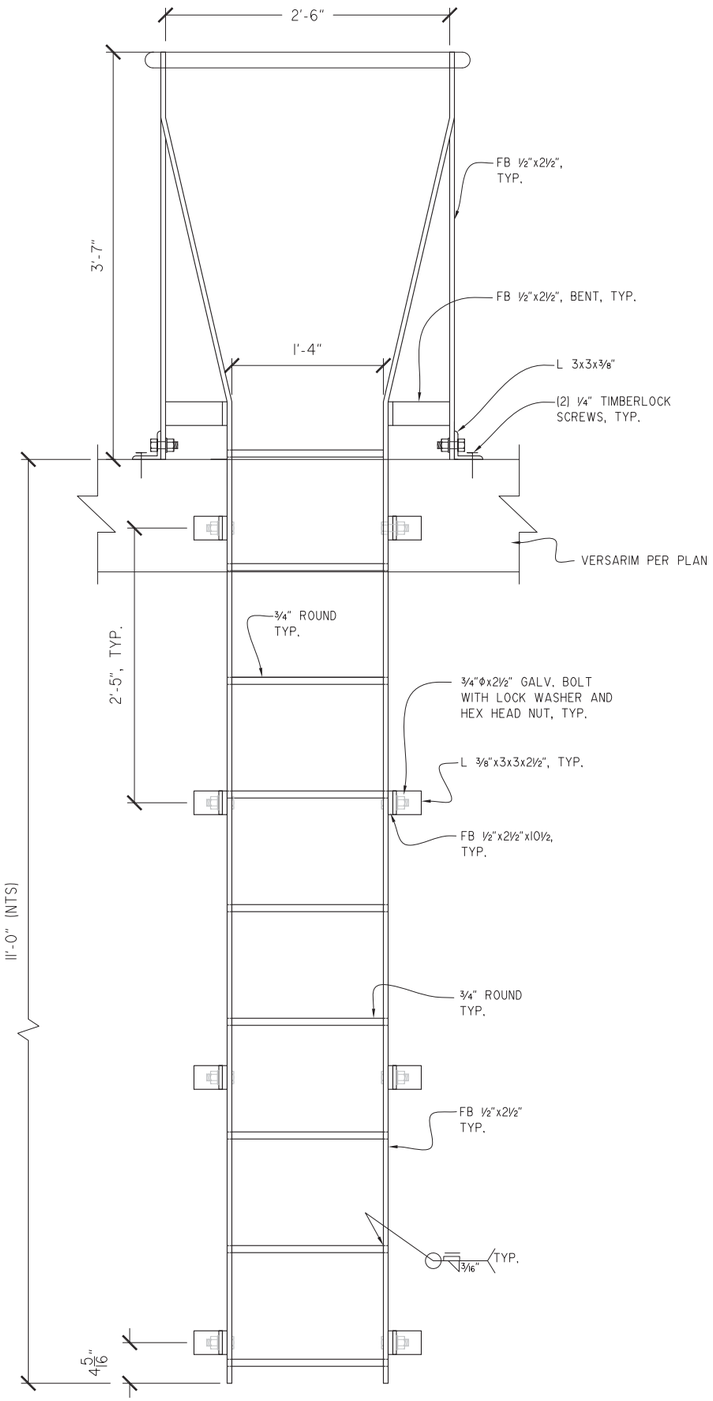

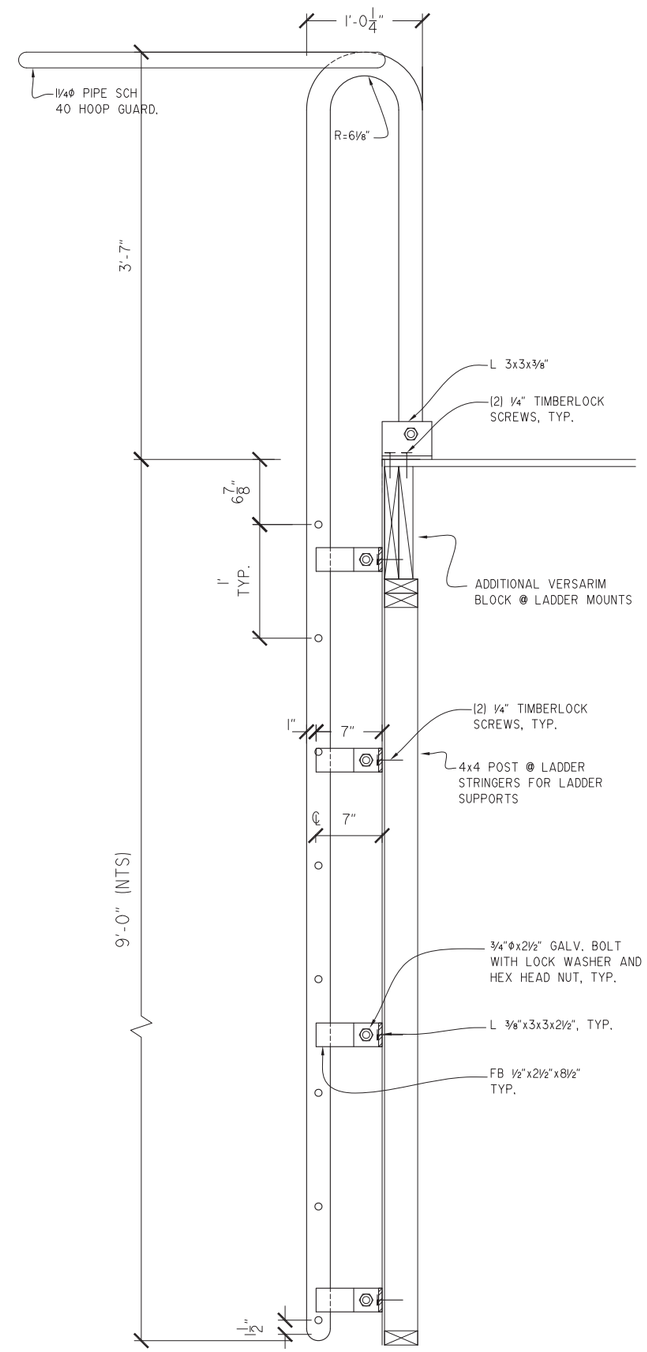

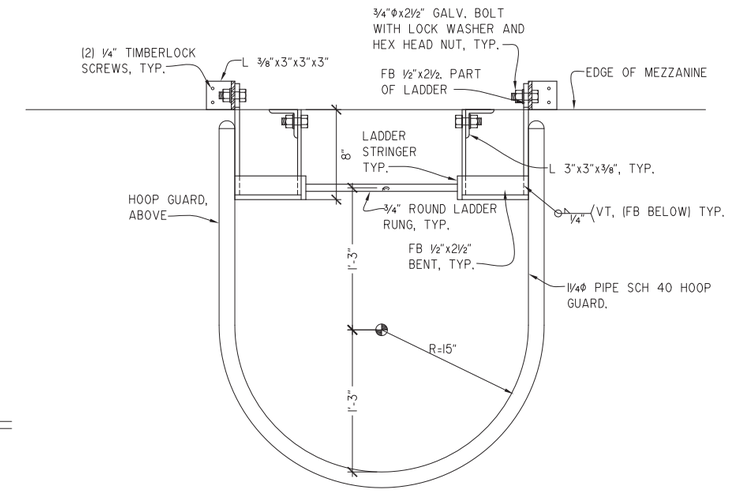

A / S6.5 MEZZANINE LADDER DETAILS

SCALE: 1-1/2"=1'-0" (22x34) / 3/4"=1'-0" (11x17)

STATE OF ALASKA 49TH — Registered Professional — Wilson J. Nelson — 01/15/14

NO.	REVISION	DATE

CONSULTING ENGINEERS
STRUCTURAL/CIVIL
155 BIDARKA ST
KENAI, AK 99611
TEL. (907) 283 - 3583
NELSONENGINEER@ALASKA.NET
NELSON ENGINEERING

HOMER FIRE STATION #2 SKYLINE DRIVE
CITY OF HOMER
HOMER, AK
LADDER DETAILS

PROJECT NO. 1359
DRAWN BY: CAM
CHECKED BY: WJN
DATE: 01/15/14
SCALES: NOTED
HORIZ. NOTED
VERT. NOTED
SHEET S6.5

SPECIFICATIONS

PLANS:
THE CONTRACTOR SHALL PROVIDE ALL MATERIALS AND LABOR NECESSARY FOR A COMPLETE, FUNCTIONAL AND COORDINATED INSTALLATION. THE DRAWINGS ARE DIAGRAMMATIC, NOT NECESSARILY SHOWING ALL OFFSETS OR EXACT LOCATIONS OF FITTINGS, PIPING AND DUCTS. IT IS THE RESPONSIBILITY OF THE CONTRACTOR TO COORDINATE THEIR WORK WITH OTHER TRADES AND FIELD CONDITIONS. ANY DEVIATIONS FROM THE PLANS SHOULD BE BROUGHT TO THE ATTENTION OF THE PROJECT ENGINEER.

PERMITS:
THE CONTRACTOR SHALL SECURE AND PAY FOR ALL NECESSARY PERMITS AND FEES. CONTRACTOR WILL BE RESPONSIBLE FOR COORDINATING ALL REQUIRED INSPECTIONS WITH THE CITY DURING THE COARSE OF CONSTRUCTION.

CODE:
ALL WORK SHALL BE DONE IN ACCORDANCE WITH THE LATEST ADOPTED EDITION OF THE INTERNATIONAL BUILDING CODE (IBC), INTERNATIONAL MECHANICAL CODE (IMC), UNIFORM PLUMBING CODE (UPC), AND NATIONAL ELECTRICAL CODE (NEC). SHEET METAL WORK SHALL BE DONE IN ACCORDANCE WITH SMACNA STANDARDS.

SUBMITTALS:
THE CONTRACTOR SHALL PROVIDE SUBMITTAL DATA ON ALL MECHANICAL SYSTEMS. THIS INFORMATION SHALL BE BOUND IN A BINDER, PROPERLY MARKED AND TAGGED. DATA SUBMITTED SHALL BE COMPLETE AND SUBMITTED TOGETHER. SUBMITTALS SHALL BE CLEARLY MARKED TO INDICATE EXACT ITEM TO BE SUPPLIED.

EQUIPMENT SUBSTITUTIONS:
ALL EQUIPMENT LISTED IS REPRESENTATIVE OF THE STANDARD OF QUALITY AND PERFORMANCE REQUIRED. "OR EQUAL" SUBSTITUTIONS WILL BE CONSIDERED IF THE SUBSTITUTIONS ARE SHOWN TO BE EQUAL OR BETTER QUALITY, INCLUDING EFFICIENCY OF PERFORMANCE, SIZE, AND WEIGHT.

AS-BUILTS:
PROVIDE A COMPLETE SET OF AS-BUILT DRAWINGS AT THE END OF THE PROJECT. AS-BUILT DRAWINGS SHALL SHOW ALL CHANGES MADE TO THE PROJECT DURING CONSTRUCTION.

OPERATIONS AND MAINTENANCE MANUAL:
AT THE END OF THE PROJECT PROVIDE THE OWNER WITH TWO SETS OF AN OPERATIONS AND MAINTENANCE MANUAL ASSEMBLED SPECIFICALLY FOR THIS PROJECT TO INCLUDE ALL MECHANICAL EQUIPMENT FURNISHED FOR THIS CONTRACT.

WARRANTY:
ALL WORK PERFORMED UNDER THIS CONTRACT IS TO BE FREE FROM DEFECTS IN MATERIALS AND WORKMANSHIP FOR A PERIOD OF ONE YEAR FROM ACCEPTANCE. ANY FAULTY MATERIALS OR WORKMANSHIP SHALL BE REPAIRED OR REPLACED TO THE SATISFACTION OF THE OWNER DURING THE GUARANTEE PERIOD.

PENETRATIONS:
ALL PENETRATIONS THROUGH FIRE RATED CONSTRUCTION (FIRE BARRIERS, SHAFTS AND HORIZONTAL ASSEMBLIES) SHALL BE PREMANUFACTURED, UL LISTED ASSEMBLIES AND MUST COMPLY WITH IBC CHAPTER 7.

CLEARANCE:
PROVIDE RECOMMENDED MANUFACTURES CLEARANCE AND ACCESS TO ALL EQUIPMENT.

SEISMIC RESTRAINT:
ALL PIPING, DUCT WORK AND EQUIPMENT SHALL BE SEISMICALLY RESTRAINED IN ACCORDANCE WITH THE SMACNA SEISMIC RESTRAINT MANUAL FOR MECHANICAL SYSTEMS.

MECHANICAL IDENTIFICATION:
PIPING, DUCTWORK AND EQUIPMENT SHALL BE PROVIDED WITH IDENTIFICATION. EXPOSED PIPING SHALL BE LABELED WITH PREFABRICATED, SEMI RIGID PLASTIC, PAINTER STENCIL, INDICATING SERVICE AND FLOW DIRECTION, AT NOT LESS THAN 20 FEET ON CENTER AND AT EACH SIDE OF WALL, FLOOR, AND CEILING PENETRATIONS.

PIPING:
SANITARY WASTE AND VENT PIPING SHALL BE OF ABS TYPE MATERIAL. DOMESTIC WATER PIPING SHALL BE TYPE L HARD DRAWN COPPER TUBING AND WROUGHT SOLDER TYPE FITTINGS. USE LEAD FREE SILVER BEARING SOLDER ONLY. PEX TUBING MAY BE USED WHERE APPROVED BY CODE. GAS PIPING TO BE SCHEDULE 40 CARBON STEEL, WITH THREADED FITTINGS. CONCEAL ALL PIPING IN FINISHED AREAS UNLESS AUTHORIZED BY OWNER. PROVIDE BACK FLOW PREVENTER DEVICES WHERE REQUIRED BY THE UPC. PROVIDE ISOLATION VALVES (BALL VALVES) FOR EACH FIXTURE BATTERY AND WHERE INDICATED ON THE DRAWINGS. TEST ALL PLUMBING AND PIPING SYSTEMS IN ACCORDANCE WITH THE UPC. FLUSH, DRAIN, AND STERILIZE THE DOMESTIC WATER LINES IN ACCORDANCE WITH AWWA C601. FILL ALL HEATING PIPING WITH TRISODIUM PHOSPHATE SOLUTION AND OPERATE FOR SEVERAL HOURS AT TEMPERATURE BEFORE FLUSHING AND FILLING WITH WATER.

INSULATION:
INSULATE ALL COLD PIPES WITH 1 INCH FIBERGLASS BATT INSULATION. INSULATE ALL HOT WATER PIPES UP TO 2 INCHES WITH 1 INCH FIBERGLASS INSULATION. INSULATE ALL HOT WATER PIPES 2-1/2 INCHES AND GREATER WITH 1-1/2 INCH FIBERGLASS INSULATION. PROVIDE VAPOR BARRIER JACKET COVER ON ALL INSULATED PIPE. INSULATE EXHAUST DUCT WORK FROM FAN TO THE EXTERIOR WITH A MINIMUM R-7 DUCT INSULATION. DUCT WORK INSTALLED OUTSIDE OF THE BUILDING THERMAL BOUNDARY SHALL BE INSULATED WITH SEMI-RIGID BONDED GLASS FIBER DUCT INSULATION WITH A 2 INCH MINIMUM THICKNESS AND A DENSITY OF 3 POUNDS PER CUBIC FOOT WITH A FOIL OUTER SURFACE. ALTERNATIVE INSULATION METHOD CAN BE USED WHEN SUBMITTED AND APPROVED BY THE PROJECT ENGINEER BEFORE STARTING WORK.

PLUMBING:
PLUMBING FIXTURES SHALL BE COMMERCIAL GRADE COMPLETE WITH ALL TRIM, MANUFACTURER AND MODEL AS INDICATED ON THE PLUMBING FIXTURE SCHEDULE, OR APPROVED EQUAL. PROVIDE SHOCK CONTROL DEVICES OR WATER HAMMER ARRESTORS FOR ALL BATTERIES OF FIXTURES.

TRAP SEAL PROTECTION:
FLOOR DRAINS DIRECTLY CONNECTED TO THE DRAINAGE SYSTEM AND SUBJECT TO INFREQUENT USE SHALL BE PROVIDED WITH AN APPROVED AUTOMATIC MEANS OF MAINTAINING THEIR WATER SEALS, AUTOMATIC TRAP PRIMING DEVICES SHALL BE ACCESSIBLE FOR MAINTENANCE.

HYDRONIC AND DHW HEATING:
HYDRONIC HEATING AND DOMESTIC HOT WATER HEATING EQUIPMENT SHALL BE COMMERCIAL GRADE COMPLETE WITH ALL SAFETIES AND TRIM, MANUFACTURER AND MODEL AS INDICATED ON THE EQUIPMENT SCHEDULES, OR APPROVED EQUAL. AIR VENTS SHALL BE PROVIDED AT ALL HIGH POINTS OF THE PIPING SYSTEM, LOW POINT DRAINS SHALL BE PROVIDED AT ALL LOW POINTS OF THE PIPING SYSTEM.

CONTROLS:
THE CONTRACTOR SHALL PROVIDE A COMPLETE AND OPERATIONAL CONTROL SYSTEM AS REQUIRED TO PROVIDE EQUIPMENT CONTROL AND PROPER OPERATION.

ABBREVIATIONS

AAV	AUTOMATIC AIR VENT
AVG	AVERAGE
BB	BASEBOARD
BWS	BOILER WATER SUPPLY
BWR	BOILER WATER RETURN
BTUH	BTU'S PER HOUR
C/A	COMBUSTION AIR
CFM	CUBIC FEET PER MINUTE
CONT	CONTINUED
CO	CLEANOUT
CP	CIRCULATION PUMP
CW	COLD WATER
ø	DIAMETER
DN	DOWN
DWG	DRAWING
E/A	EXHAUST AIR
EF	EXHAUST FAN
ET	EXPANSION TANK
EX	EXHAUST
FOR	FUEL OIL RETURN
FOS	FUEL OIL SUPPLY
FT	FEET
FPM	FEET PER MINUTE
F	FAHRENHEIT
FCO	FLOOR CLEANOUT
GAL	GALLONS
GPM	GALLONS PER MINUTE
GPH	GALLONS PER HOUR
HP	HORSE POWER
HW	HOT WATER
HWR	HOT WATER RECIRCULATED
IAW	IN ACCORDANCE WITH
IN	INCHES
MAX	MAXIMUM
MBH	THOUSAND BTH PER HOUR
MFGR	MANUFACTURER
MIN	MINIMUM
NTS	NOT TO SCALE
OC	ON CENTER
OD	OUTSIDE DIAMETER
PD	PRESSURE DROP
PH	PHASE
PSI	POUNDS PER SQUARE INCH
SP	STATIC PRESSURE
TEMP	TEMPERATURE
TSP	TOTAL STATIC PRESSURE
T	THERMOSTAT
TYP	TYPICAL
V	VENT
VEL	VELOCITY
VTR	VENT THROUGH ROOF
WCO	WALL CLEANOUT
WHA	WATER HAMMER ARRESTOR
WH	WATER HEATER
W	WASTE
W/	WITH
W/O	WITHOUT
WPD	WATER PRESSURE DROP
YCO	YARD CLEANOUT

LEGEND

WASTE
VENT
COLD WATER
HOT WATER
HOT WATER RETURN
GAS
PIPE UP
PIPE DOWN
TEE UP
CAP
UNION
DIRECTION OF FLOW
BALL VALVE
2-WAY CONTROL VALVE
3-WAY CONTROL VALVE
CHECK VALVE
BALANCING VALVE
PRESSURE REDUCING VALVE
TEMP/PRESSURE RELIEF VALVE
HOSE BIB
PUMP W/FLANGES
TEMP/PRESSURE GAUGE
FLOOR CLEANOUT
FLOOR DRAIN
FLOOR SINK
S/A & MUA UP/DOWN
S/A & MUA DIFFUSER
R/A UP/DOWN
R/A DIFFUSER
E/A UP/DOWN
E/A GRILLE
ROUND DUCT UP/DOWN
VOLUME DAMPER
MOTORIZED CONTROL DAMPER
SOUND LINED DUCTWORK
DUCT SIZE
FIRST DIMENSION IS SIDE SHOWN
INSULATED DUCTWORK
TURNING VANES
FLEXIBLE DUCT
THERMOSTAT
FAN CONTROLLER
DETAIL NUMBER
SHEET LOCATED ON
SHEET NOTES

PLUMBING FIXTURE SCHEDULE

SYMBOL	FIXTURE	WASTE	VENT	HW	CW	REMARKS
P-1	WATER CLOSET	3	2	--	1/2	KOHLER KINGSTON K-4323-L-G9 SLOAN MODEL 140 - 1.28 ES-STMOSWB
P-2	LAVATORY	1-1/2	1-1/2	1/2	1/2	KOHLER CHESAPEAKE K-1722-G9 CHICAGO FAUCETS W/ECAST TECH. - STAINLESS
P-3	FLOOR UTILITY TUB	2	1-1/2	5/8	5/8	MUSTEE UTILATUB FLOOR-MOUNT UTILITY TUB DELTA WALL MOUNT MODEL 28T9 - STAINLESS
P-4	FLOOR DRAIN	2	1-1/2	--	--	INSTALL TRAP PRIMER PER DETAIL (3/M2.0)

BOILER SCHEDULE

SYMBOL	MFGR/MODEL	FUEL	CAPACITY (MBH)	ELECTRICAL (VOLTS/HZ/PH)	FLUE Ø (IN)	REMARKS
B-1	LOCHINVAR/WHN285	GAS	264	120/60/1	3	229 NET MBH 3" PVC DIRECT VENT

WATER HEATER SCHEDULE

SYMBOL	MFGR/MODEL	CAPACITY (GAL)	FIRST-HOUR RATING (GPH)	CONTINUOUS FLOW (GPH)	REMARKS
WH-1	AMTROL/WH-7CDW	41	332	379	SET WATER TEMP TO 140° ANTI-SCALD VALVE SET TO 120°

WATER PRESSURE BOOSTER TANK SCHEDULE

SYMBOL	MFGR/MODEL	CAPACITY (GAL)	MAX PRESS. BOOST (PSI)	ELECTRICAL (VOLTS/HZ/PH/HP)	REMARKS
PB-1	AMTROL/RP-25HP	34	50	115/60/1/0.5	6 GPM DESIGN FLOW

GLYCOL MAKEUP TANK SCHEDULE

SYMBOL	MFGR/MODEL	CAPACITY (GAL)	FLUID TYPE	ELECTRICAL (VOLTS/HZ/PH)	REMARKS
GT-1	AXIOM/SF100	55	50%-P.G.	115/60/1	--

AIR COMPRESSOR SCHEDULE

SYMBOL	MFGR/MODEL	ELECTRICAL (VOLTS/HZ/PH/HP)	REMARKS
AC-1	INGERSOLL RAND / 2340L5	230/60/1/5	60-GALLON TWO-STAGE 14.7 CFM @ 175 PSI
AD-1	INGERSOLL RAND / D25IN	115/60/1/2.23AMP	R134A REFRIGERANT

PUMP SCHEDULE

SYMBOL	MFGR/MODEL	ELECTRICAL (VOLTS/HZ/PH/HP)	REMARKS
CP-1	GRUNDFOS/UPS 26-99FC	120/60/1/(1/25)	PRIMARY SYSTEM PUMP WIRE DIRECTLY TO BOILER
CP-2	GRUNDFOS/UPS 15-58FC	120/60/1/(1/25)	INJECTION PUMP WIRE TO TACO PC705-2
CP-3	GRUNDFOS/UP 15-42F	120/60/1/(1/25)	ZONE PUMP CONTROLED BY THERMOSTATS
CP-4	GRUNDFOS/UPS 15-58FC	120/60/1/(1/25)	WATER HEATER PUMP WIRE TO PUMP CONTROL PANEL

FAN SCHEDULE

SYMBOL	MFGR/MODEL	AIR VOLUME (CFM)	STATIC PRESSURE (in.H20)	ELECTRICAL (VOLTS/HZ/PH)	REMARKS
EF-1	PANASONIC/FV-11VQ	110	0.25	120/60/1	LOW SONE 4"Ø DUCT
F-1	LEADING EDGE 60001	46,000	--	120/60/1	PADDLE FAN 60" DIAMETER

CENTRAL ALASKA ENGINEERING COMPANY, LLC.
32215 LAKEFRONT DR., SOLDOTNA, AK 99669
PHONE (907) 260-5311 FAX (907) 260-5312
E-mail: jherring@akengineer.com

STATE OF ALASKA
49th
JERRY P. HERRING
ME-8287
REGISTERED PROFESSIONAL ENGINEER
1/15/2014

NO.	REVISION	DATE

CONSULTING ENGINEERS
STRUCTURAL/CIVIL
155 BIDARKA ST
KENAI, AK 99611
TEL. (907) 283 - 3583
NELSONENGINEER@ALASKA.NET
NELSON ENGINEERING

HOMER FIRE STATION #2 SKYLINE DRIVE
CITY OF HOMER, ALASKA
MECHANICAL SPECIFICATIONS

PROJECT NO. 1113
DRAWN BY: MFJ
CHECKED BY: JPH
DATE: 01/15/2014
SCALES: NOTED
HORIZ. NOTED
VERT. NOTED
SHEET M1.0
1 OF 6

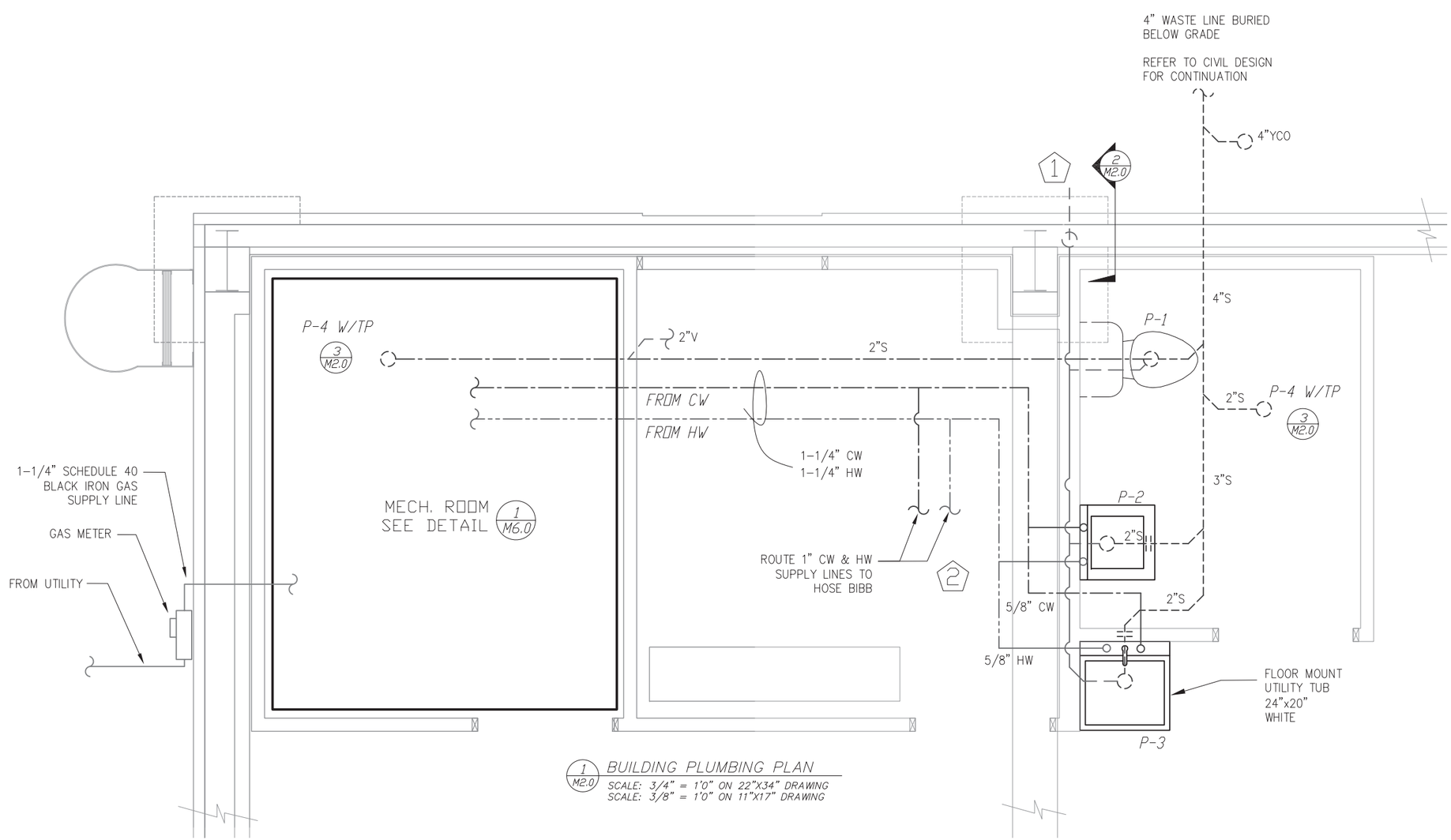

1 M2.0 BUILDING PLUMBING PLAN
SCALE: 3/4" = 1'0" ON 22"X34" DRAWING
SCALE: 3/8" = 1'0" ON 11"X17" DRAWING

SHEET NOTES:

1. ALL PLUMBING FIXTURES WILL BE ROUTED TO A COMMON 3" VENT THROUGH EASTERN WALL. FLASH AND SEAL WALL PENETRATIONS AS REQUIRED. SIDE WALL PENETRATION AT 15' ABOVE FINISHED FLOOR.
2. ROUTE 1" COPPER HOT WATER AND COLD WATER SUPPLY LINES TO ZURN Z1300 WALL HYDRANT, ENCASED, NON-FREEZE, ANTI-SIPHON, AUTOMATIC DRAINING. INSULATE ALL COPPER PIPING WITH KNAUF 1-1/2" FIBERGLASS PIPE INSULATION.

PLUMBING FIXTURE SCHEDULE

SYMBOL	FIXTURE	WASTE	VENT	HW	CW	REMARKS
P-1	WATER CLOSET	3	2	--	1/2	KOHLER KINGSTON K-4323-L-G9 SLOAN MODEL 140 - 1.28 ES-STMOSWB
P-2	LAVATORY	1-1/2	1-1/2	1/2	1/2	KOHLER CHESAPEAKE K-1722-G9 CHICAGO FAUCETS w/ECAST TECH. - STAINLESS
P-3	FLOOR UTILITY TUB	2	1-1/2	5/8	5/8	MUSTEE UTILATUB FLOOR-MOUNT UTILITY TUB DELTA WALL MOUNT MODEL 28T9 - STAINLESS
P-4	FLOOR DRAIN	2	1-1/2	--	--	INSTALL TRAP PRIMER PER DETAIL (3/M2.0)

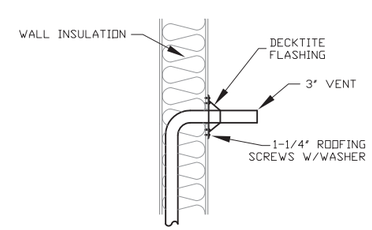

2 M2.0 VENT THROUGH WALL SIDE VIEW
NOT TO SCALE

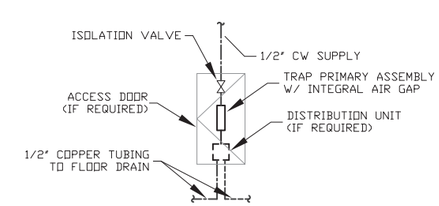

3 M2.0 TRAP PRIMER DETAIL
NOT TO SCALE

CENTRAL ALASKA ENGINEERING COMPANY, LLC.
32215 LAKEFRONT DR., SOLDOTNA, AK 99669
PHONE (907) 260-5311 FAX (907) 260-5312
E-mail: jherring@akengineer.com

STATE OF ALASKA 49th JERRY P. HERRING ME-8287 REGISTERED PROFESSIONAL ENGINEER 7/15/2014

NO.	REVISION	DATE

CONSULTING ENGINEERS
STRUCTURAL/CIVIL
155 BIDARKA ST
KENAI, AK 99611
TEL. (907) 283 - 3583
NELSONENGINEER@ALASKA.NET
NELSON ENGINEERING

HOMER FIRE STATION #2 SKYLINE DRIVE
CITY OF HOMER, ALASKA
PLUMBING PLAN

PROJECT NO. 1113
DRAWN BY: MFJ
CHECKED BY: JPH
DATE: 01/15/2014
SCALES: NOTED
HORIZ. NOTED
VERT. NOTED
SHEET M2.0
2 OF 6

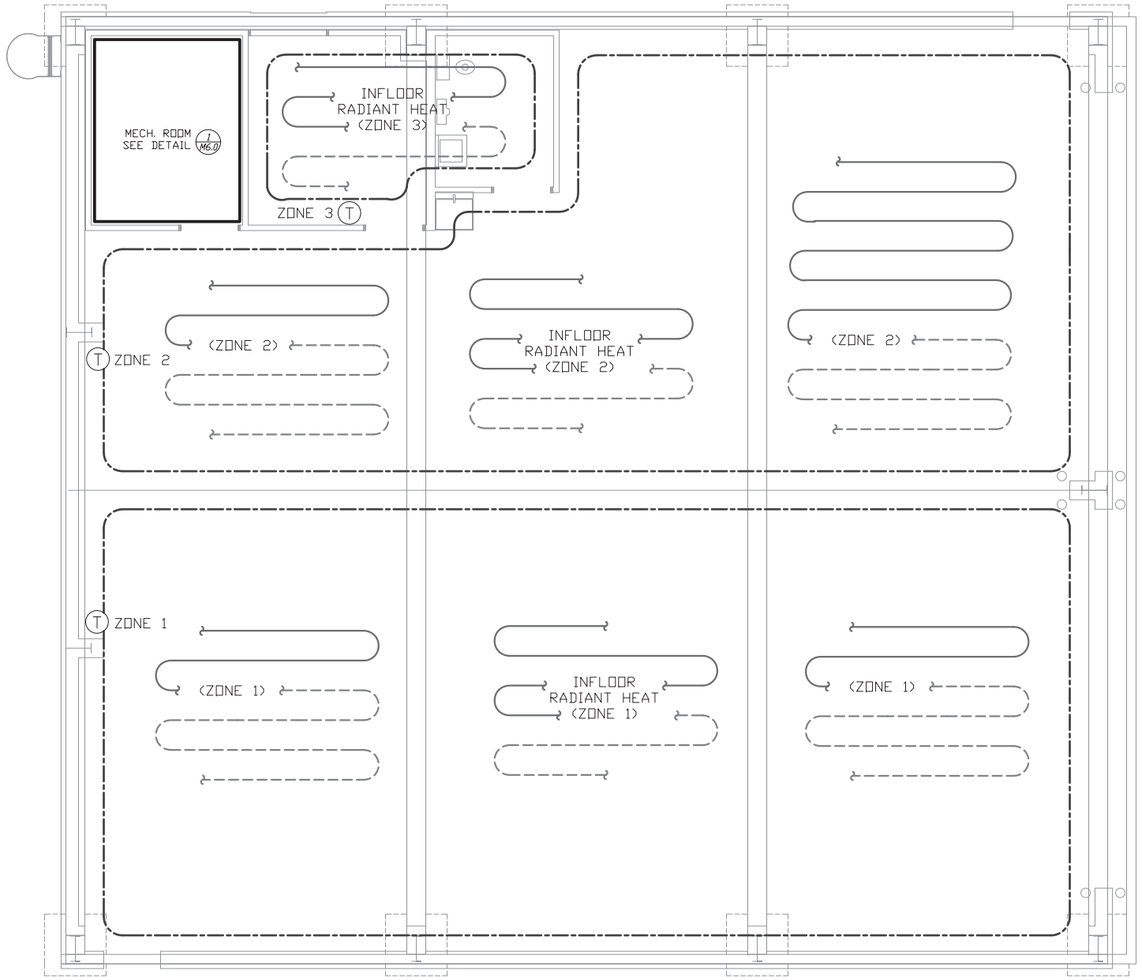

1 M3.0 BUILDING HEATING PLAN

SCALE: 1/4" = 1'0" ON 22"X34" DRAWING
SCALE: 1/8" = 1'0" ON 11"X17" DRAWING

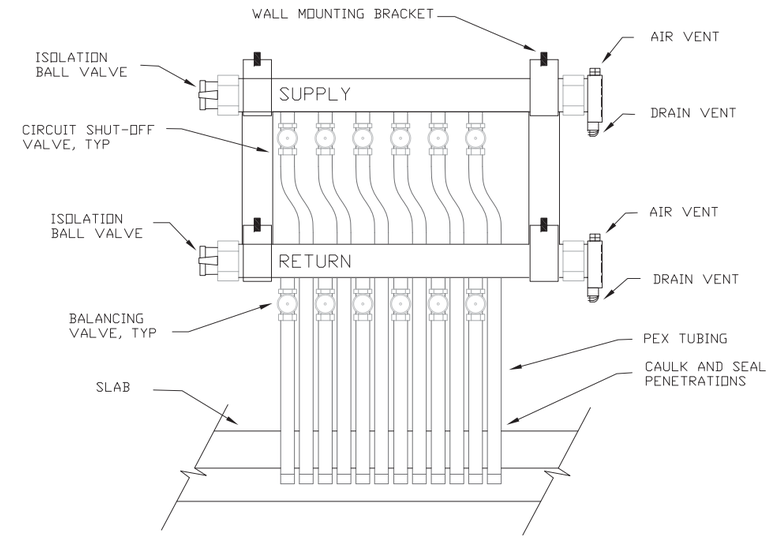

2 M3.0 RADIANT MANIFOLD PIPING DETAILS

NOT TO SCALE

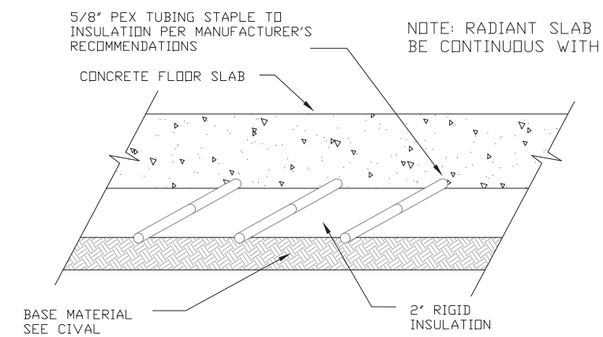

3 M3.0 RADIANT SLAB DETAILS

NOT TO SCALE

RADIANT HEATING SCHEDULE

ZONE	MANIFOLD	AREA (SF)	BTU/SF	# OF LOOPS	LOOP LENGTH	LOOP FLOW (GPM)	TOTAL ZONE FLOW (GPM)	ON CENTER TUBE SPACING	TUBE SIZE	LOOP PRESS DROP (FT)	LOOP ARRANGEMENT	SYSTEM TEMP.	TEMP. DROP	FLUID	MIN. MANIFOLD CONNECTION SIZE	REMARKS
1	1	1375	47.3	7	282	1.0	7.1	9"	5/8"	5.6	COUNTERFLOW	106 F	20 F	50% P.G.	1"	WEST BAY
2	2	1110	47.2	6	267	0.97	5.8	9"	5/8"	4.7	COUNTERFLOW	106 F	20 F	50% P.G.	1"	EAST BAY
3	3	174	47.6	1	252	0.91	0.91	9"	5/8"	4.0	COUNTERFLOW	106 F	20 F	50% P.G.	3/4"	OFFICE/RESTROOM

CENTRAL ALASKA ENGINEERING COMPANY, LLC.
32215 LAKEFRONT DR., SOLDOTNA, AK 99669
PHONE (907) 260-5311 FAX (907) 260-5312
E-mail: jherring@akengineer.com

STATE OF ALASKA
49th
JERRY P. HERRING
ME-8287
REGISTERED PROFESSIONAL ENGINEER
1/15/2014

NO.	REVISION	DATE

CONSULTING ENGINEERS
STRUCTURAL/CIVIL
155 BIDARKA ST
KENAI, AK 99611
TEL. (907) 283 - 3583
NELSONENGINEER@ALASKA.NET
NELSON ENGINEERING

HOMER FIRE STATION #2 SKYLINE DRIVE
CITY OF HOMER, ALASKA
HEATING PLAN

PROJECT NO. 1113
DRAWN BY: MFJ
CHECKED BY: JPH
DATE: 01/15/2014
SCALES: NOTED
HORIZ. NOTED
VERT. NOTED
SHEET M3.0
3 OF 6

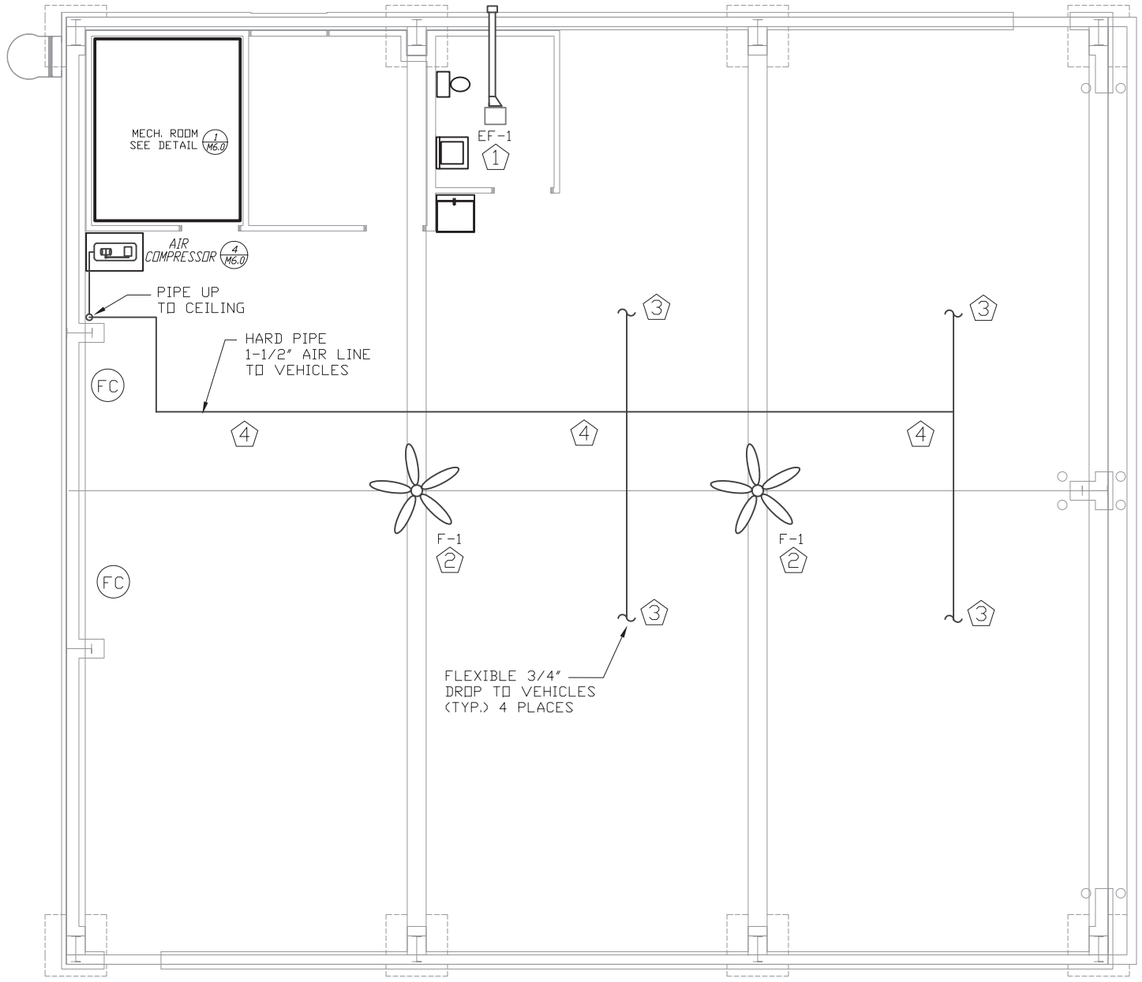

1/M4.0 VENTILATION AND AIR COMPRESSOR PLAN

SCALE: 1/4" = 1'0" ON 22"X34" DRAWING
SCALE: 1/8" = 1'0" ON 11"X17" DRAWING

SHEET NOTES:

1. 4"ø 30 GA GALVANIZED TOILET ROOM EXHAUST FAN DUCT. ROUTE IN INSULATED DUCT TO EASTERN WALL PENETRATION. INSTALL W/HOOD AND BACK-DRAFT DAMPER. MOTION SENSOR AND HUMIDITY SENSOR ARE INTEGRAL TO EXHAUST FAN.
2. 60" DIAMETER ANTI-STRATIFICATION FAN WITH MODEL 12003 MOTOR SPEED CONTROL. MOUNT FAN TO CEILING PURLIN OR GIRDER FOLLOWING MANUFACTURERS INSTALLATION INSTRUCTIONS. MOUNT FAN SPEED CONTROL NEXT TO THE HEATING SYSTEM THERMOSTATS. (TYP 2) (FC)
3. ¾" FLEXIBLE AIR LINE DROPPING FROM CEILING TO FINISHED FLOOR IN 4 PLACES. ROUTE TO AVOID PADDLE FANS. COORDINATE WITH CITY ON EXACT LOCATION REQUIRED FOR HOSE CONNECTION TO FIRE EQUIPMENT.
4. INSULATE ALL STEEL AIR SUPPLY LINES WITH KNAUF 1-1/2" FIBERGLASS PIPE INSULATION.

FAN SCHEDULE

SYMBOL	MFGR/MODEL	AIR VOLUME (CFM)	STATIC PRESSURE (in.H20)	ELECTRICAL (VOLTS/HZ/PH)	REMARKS
EF-1	PANASONIC/FV-11VQ	110	0.25	120/60/1	LOW SONE 4"ø DUCT
F-1	LEADING EDGE 60001	46,000	--	120/60/1	PADDLE FAN 60" DIAMETER

AIR COMPRESSOR SCHEDULE

SYMBOL	MFGR/MODEL	ELECTRICAL (VOLTS/HZ/PH/HP)	REMARKS
AC-1	INGERSOLL RAND / 2340L5	230/60/1/5	60-GALLON TWO-STAGE 14.7 CFM @ 175 PSI
AD-1	INGERSOLL RAND / D25IN	115/60/1/2.23AMP	R134A REFRIGERANT

CENTRAL ALASKA ENGINEERING COMPANY, LLC.
32215 LAKEFRONT DR., SOLDOTNA, AK 99669
PHONE (907) 260-5311 FAX (907) 260-5312
E-mail: jherring@akengineer.com

STATE OF ALASKA 49th JERRY P. HERRING ME-8287 REGISTERED PROFESSIONAL ENGINEER 01/15/2014

NO.	REVISION	DATE

CONSULTING ENGINEERS
STRUCTURAL/CIVIL
155 BIDARKA ST
KENAI, AK 99611
TEL. (907) 283 - 3583
NELSONENGINEER@ALASKA.NET
NELSON ENGINEERING

HOMER FIRE STATION #2 SKYLINE DRIVE
CITY OF HOMER, ALASKA
VENTILATION AND AIR COMPRESSOR PLAN

PROJECT NO. 1113
DRAWN BY: MFJ
CHECKED BY: JPH
DATE: 01/15/2014
SCALES: NOTED
HORIZ. NOTED
VERT. NOTED
SHEET M4.0

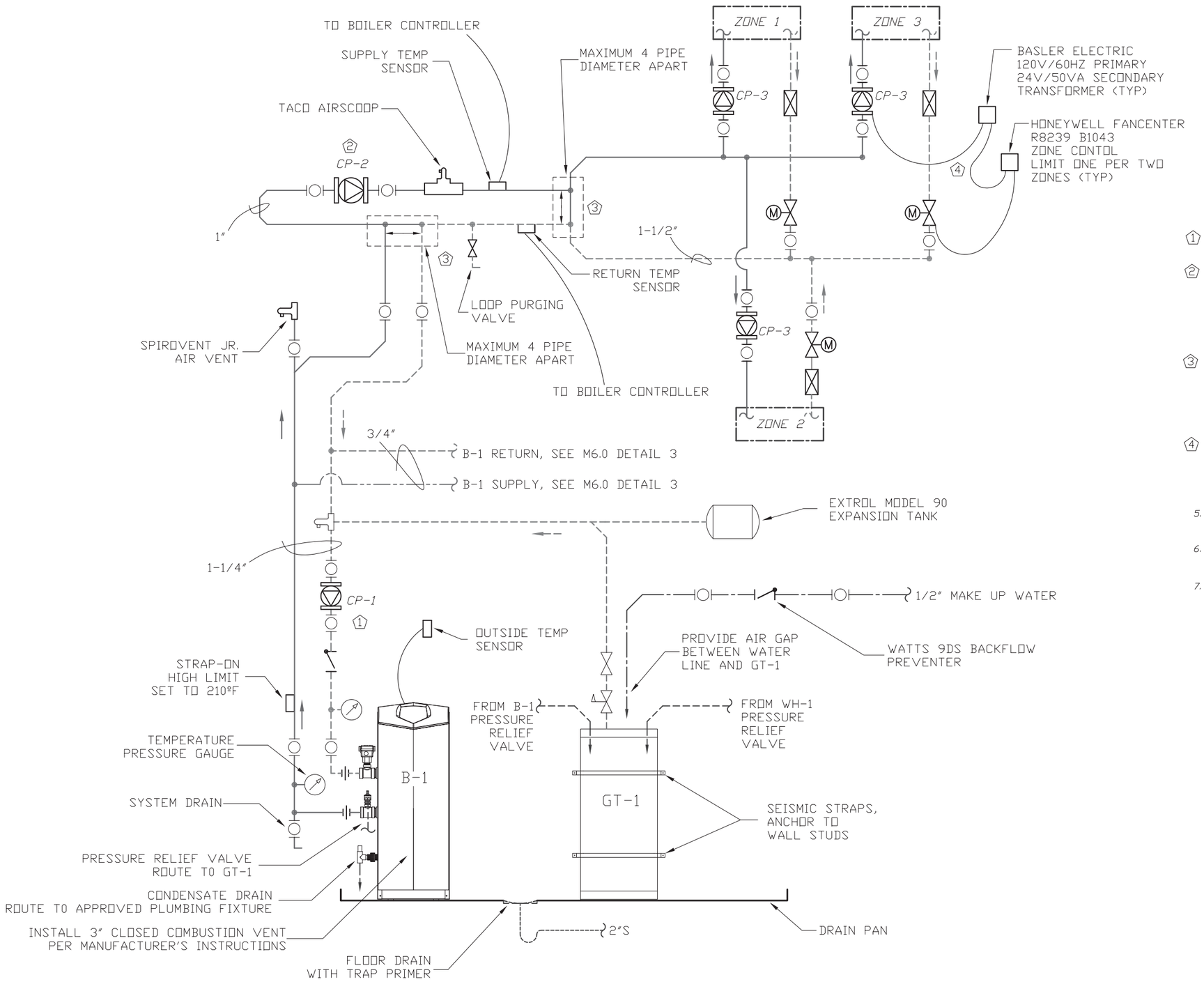

1 M5.0 BUILDING BOILER SCHEMATIC
NOT TO SCALE

SHEET NOTES:

1. CP-1 PRIMARY PUMP IS TO BE WIRED DIRECTLY TO THE BOILER.
2. VARIABLE SPEED INJECTION PUMP CP-2 TO BE CONTROLLED BY A TACO PC705-2 VARIABLE SPEED TEMPERATURE CONTROLLER WIRED TO TACO SR503-EXP. INSTALL BOILER RETURN TEMPERATURE SENSOR, MIXED SUPPLY TEMPERATURE SENSOR AND OUTDOOR SENSOR.
3. MAXIMUM SPACING BETWEEN CENTERS OF TEE SHALL NOT EXCEED 4 TIMES THE NOMINAL DIAMETER OF THE PRIMARY PIPING. THERE SHOULD BE A STRAIGHT LENGTH OF PIPING UPSTREAM OF THE FIRST TEE OF A PRIMARY / SECONDARY CONNECTION NOT LESS THAN 6 TIMES THE NOMINAL DIAMETER OF THE PRIMARY PIPING.
4. ZONE PUMPS CP-3 ARE TO BE CONTROLLED BY INDIVIDUAL THERMOSTATS ROUTED TO THE HONEYWELL FAN CENTER. LIMIT TWO ZONES PER FAN CENTER. INSTALL 120V/24V/50VA TRANSFORMER TO ACTIVATE ZONE CONTROL VALVE WITH ZONE PUMP ACTIVITY.
5. BOILER REQUIRES CERTIFIED FACTORY START-UP WITH COMBUSTION ANALYSIS TEST.
6. INSULATE ALL COPPER PIPING IN BOILER ROOM WITH KNAUF 1-1/2" FIBERGLASS PIPE INSULATION.
7. BOILER VENT TO TERMINATE AT LEAST 7-FEET ABOVE FINISHED GRADE. ROUTE BOILER VENT TO AVOID GAS METER INSTALLATION.

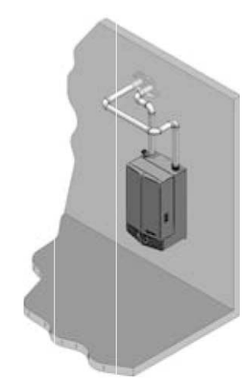

2 M5.0 SIDE-WALL BOILER VENT SCHEMATIC
NOT TO SCALE

CENTRAL ALASKA ENGINEERING COMPANY, LLC.
32215 LAKEFRONT DR., SOLDOTNA, AK 99669
PHONE (907) 260-5311 FAX (907) 260-5312
E-mail: jherring@akengineer.com

STATE OF ALASKA 49th JERRY P. HERRING ME-8287 REGISTERED PROFESSIONAL ENGINEER 1/15/2014

NO.	REVISION	DATE

CONSULTING ENGINEERS
STRUCTURAL/CIVIL
155 BIDARKA ST
KENAI, AK 99611
TEL. (907) 283-3583
NELSONENGINEER@ALASKA.NET
NELSON ENGINEERING

HOMER FIRE STATION #2 SKYLINE DRIVE
CITY OF HOMER, ALASKA
BOILER DETAILS

PROJECT NO. 1113
DRAWN BY: MFJ
CHECKED BY: JPH
DATE: 01/15/2014
SCALES: NOTED
HORIZ. NOTED
VERT. NOTED
SHEET M5.0
5 OF 6

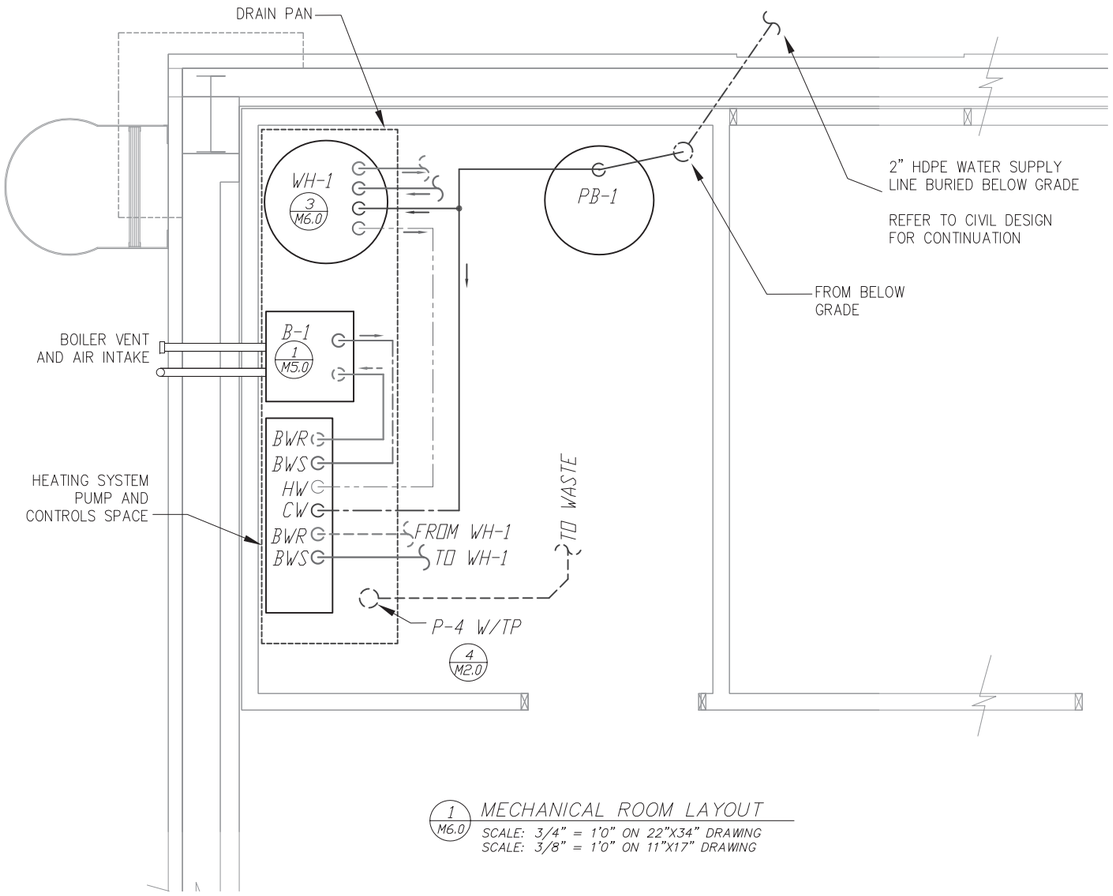

1 M6.0 MECHANICAL ROOM LAYOUT

SCALE: 3/4" = 1'0" ON 22"X34" DRAWING
SCALE: 3/8" = 1'0" ON 11"X17" DRAWING

SHEET NOTES:

1. CP-4 DOMESTIC HOT WATER PUMP IS TO BE WIRED DIRECTLY TO THE BOILER DOMESTIC HOT WATER PRIORITY CONTROLLER.
2. INSULATE ALL COPPER PIPING IN BOILER ROOM WITH KNAUF 1-1/2" FIBERGLASS PIPE INSULATION.

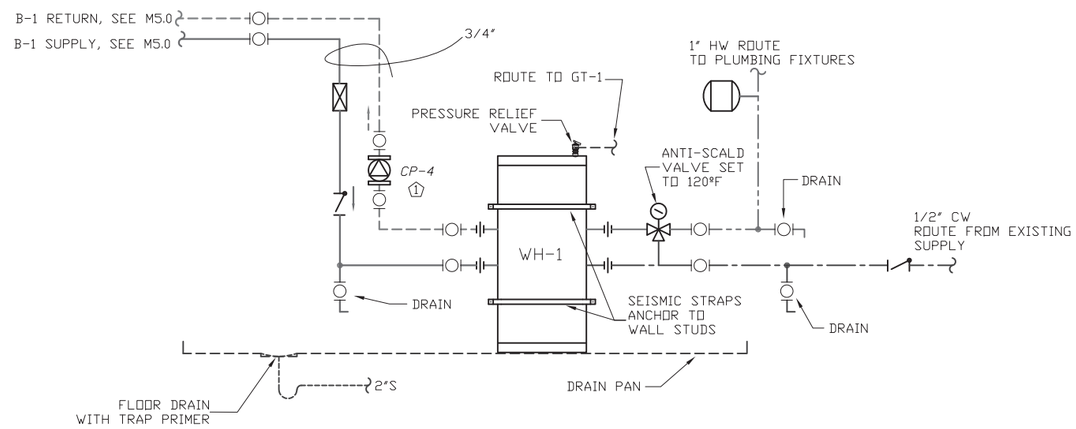

3 M6.0 HOT WATER GENERATOR SCHEMATIC

NOT TO SCALE

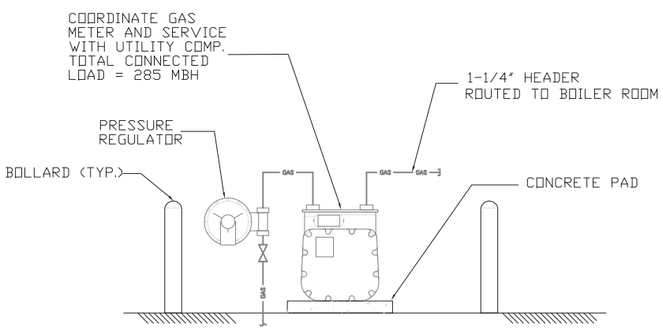

NOTES:
1. METER MUST NOT BE LOCATED CLOSER THAN 10 FT FROM A MECHANICAL AIR INTAKE.
2. GAS METER CANNOT BE LOCATED CLOSER THAN 36 IN TO OR DIRECTLY UNDER AN OPERABLE WINDOW OR WALL OPENING.

2 M6.0 GAS METER DETAIL

NOT TO SCALE

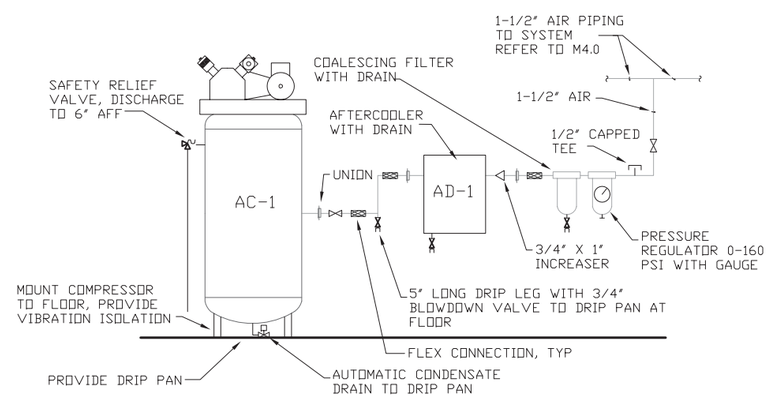

4 M6.0 AIR COMPRESSOR DETAIL

NOT TO SCALE

CENTRAL ALASKA ENGINEERING COMPANY, LLC.
32215 LAKEFRONT DR., SOLDOTNA, AK 99669
PHONE (907) 260-5311 FAX (907) 260-5312
E-mail: jherring@akengineer.com

STATE OF ALASKA 49th JERRY P. HERRING ME-8287 REGISTERED PROFESSIONAL ENGINEER 1/15/2014

NO.	REVISION	DATE

CONSULTING ENGINEERS
STRUCTURAL/CIVIL
155 BIDARKA ST
KENAI, AK 99611
TEL. (907) 283 - 3583
NELSONENGINEER@ALASKA.NET
NELSON ENGINEERING

HOMER FIRE STATION #2 SKYLINE DRIVE
CITY OF HOMER, ALASKA
MECHANICAL DETAILS

PROJECT NO. 1113
DRAWN BY: MFJ
CHECKED BY: JPH
DATE: 01/15/2014
SCALES: NOTED
HORIZ. NOTED
VERT. NOTED
SHEET M6.0
6 OF 6

GENERAL

PROVIDE ALL LABOR, PRODUCTS, AND SERVICES AS REQUIRED TO COMPLETE THE WORK INDICATED ON THE DRAWINGS AND SPECIFIED HEREIN.

WHERE THE WORK OF OTHER CRAFTS IS INVOLVED, COORDINATE ALL RELATED WORK TO PROVIDE EACH SYSTEM IN A PROPER OPERATING CONDITION.

THE CONTRACTOR SHALL TAKE ALL NECESSARY ACTIONS IN ORDER TO BECOME FAMILIAR WITH THE SCOPE OF WORK AND TO ASCERTAIN AND EVALUATE THE EXISTING CONDITIONS AFFECTING THE SCOPE OF WORK.

PERFORM ALL WORK IN STRICT ACCORDANCE WITH ALL APPLICABLE LOCAL, STATE, AND NATIONAL CODES; INCLUDING, BUT NOT LIMITED TO THE LATEST ENACTED EDITIONS OF THE FOLLOWING.

1. NATIONAL FIRE PROTECTION ASSOCIATION (NFPA), NATIONAL ELECTRIC CODE.
2. NATIONAL FIRE PROTECTION ASSOCIATION (NFPA), LIFE SAFETY CODES.
3. INTERNATIONAL BUILDING CODE (IBC).
4. INTERNATIONAL FIRE CODE (IFC).

PROVIDE INSTALLATION, EQUIPMENT AND MATERIALS THAT ARE DESIGNED, TESTED, APPROVED, AND LISTED TO THE FOLLOWING STANDARDS AS APPLICABLE.

1. AMERICAN NATIONAL STANDARDS INSTITUTE (ANSI).
2. AMERICAN SOCIETY FOR TESTING AND MATERIALS (ASTM).
3. INSTITUTE OF ELECTRICAL AND ELECTRONICS ENGINEERS (IEEE).
4. NATIONAL ELECTRICAL MANUFACTURERS ASSOCIATION (NEMA).
5. NATIONAL ELECTRICAL CONTRACTORS ASSOCIATION (NECA).
6. UNDERWRITERS LABORATORY (UL).

THE PLANS AND SPECIFICATIONS ARE COMPLEMENTARY. WHAT IS SHOWN ON ONE IS BINDING AS IF CALLED FOR IN BOTH. THE PLANS ARE DIAGRAMMATIC AND DO NOT SHOW PRECISE ROUTING OF CONDUIT AND WIRING. REFERENCE ARCHITECTS PLAN FOR INTENDED INSTALLATION AND PROVIDE FITTINGS, BOXES, AND ROUTING AS REQUIRED. DO NOT SCALE THE PLANS. LOCATIONS OF DEVICES, FIXTURES AND EQUIPMENT IS APPROXIMATE UNLESS DIMENSIONED.

PROVIDE LABELS, TAGS, AND MARKERS, AS REQUIRED TO IDENTIFY THE COMPONENTS OF THE ELECTRICAL SYSTEM. PROVIDE ENGRAVED LAMINATED LABELS ON PANELS, DISCONNECTS, AND STARTERS. PROVIDE SLEEVE TYPE WIRE MARKERS FOR CIRCUIT CONDUCTORS.

MAINTAIN A SET OF RECORD DRAWINGS TO RECORD AS-CONSTRUCTED CONDITIONS. MARKED UP DRAWINGS SHALL BE MAINTAINED ON SITE AND SHALL BE UPDATED DAILY.

PROVIDE CONNECTIONS TO ALL EQUIPMENT FURNISHED TO THE PROJECT. REFERENCE SHOP DRAWINGS AND VENDOR DATA FOR SPECIFIC CONNECTION REQUIREMENTS PRIOR TO ROUGH IN. COORDINATE WITH EQUIPMENT INSTALLER FOR FINAL LOCATION/ELEVATION OF CONNECTIONS

PROVIDE COMPLETE TESTING FOR THE ELECTRICAL SYSTEM TO VERIFY PROPER PERFORMANCE AND CONFORMANCE WITH THE INTENT OF THE DESIGN.

CONTRACTOR SHALL BE REQUIRED TO COORDINATE IN ADVANCE WITH THE OWNER AND PROVIDE NOTIFICATION MINIMUM OF 72 HOURS IN ADVANCE FOR ALL REQUIRED PROGRESS INSPECTIONS DURING THE COURSE OF CONSTRUCTION.

SUBMIT A COMPLETE SET OF CUT SHEETS AND VENDOR DATA FOR ALL ELECTRICAL MATERIALS AND EQUIPMENT INTENDED FOR INSTALLATION. ALL WORK SHALL BE INSTALLED IN CONFORMANCE WITH MANUFACTURERS INSTRUCTIONS.

RACEWAYS, BOXES, AND FITTINGS

ALL WIRING SHALL BE METAL CLAD CABLE OR INSTALLED IN RACEWAY. UTILIZE NEC/NEMA APPROVED BOXES AND FITTINGS. FITTINGS SHALL BE INSTALLED ACCORDING TO THE MATERIAL LISTING TO MAINTAIN CONTINUITY OF GROUND PATH. PROVIDE FIRESTOPPING AT ALL PENETRATIONS THROUGH FIRE RATED PARTITIONS. RACEWAYS SHALL BE INSTALLED CONCEALED IN FINISHED LOCATIONS UNLESS APPROVED OTHERWISE.

ELECTRICAL METALLIC TUBING (EMT): ANSI C80.3, GALVANIZED TUBING, COMPRESSION TYPE FITTINGS WITH INSULATED THROAT. APPROVED IN ALL INTERIOR DRY LOCATIONS.

RIGID METAL CONDUIT: ANSI C80.1, GALVANIZED STEEL, THREADED TYPE FITTINGS AND HUBS. APPROVED IN ALL WET OR DRY LOCATIONS.

FLEXIBLE METAL CONDUIT: FS WW-C-566, STEEL, FULL WALL THICKNESS, STEEL FITTINGS WITH INSULATED THROAT. APPROVED FOR CONNECTIONS TO LIGHTING FIXTURES AND EQUIPMENT.

LIQUIDTIGHT FLEXIBLE CONDUIT: FLEX STEEL CONDUIT WITH PVC COATING, ANSI FB-1 STEEL FITTINGS. APPROVED FOR CONNECTIONS TO MECHANICAL EQUIPMENT.

METALLIC JUNCTION BOXES: PRESSED STEEL, FACTORY PUNCHED FOR 1/2" AND 3/4" KNOCKOUTS. PROVIDE SUITABLE DEVICE RINGS TO PERMIT MOUNTING OF EACH DEVICE STRAP. PROVIDE BLANK COVERS ON ALL BOXES NOT EQUIPPED WITH OUTLETS.

PULL BOXES: COLD ROLLED STEEL, NEMA RATED ACCORDIING TO THE INSTALLED ENVIRONMENT, WITH MATCHING SCREW OR HINGED COVER AS APPROPRIATE.

METAL CLAD CABLE: STEEL, FULL WALL THICKNESS, INTEGRAL GROUND WITH FULL INTERLOCK, STEEL FITTINGS WITH INSULATED THROAT, WITH FACTORY INSTALLED CONDUCTORS COLOR CODED AS APPROPRIATE. MC CABLLE CONNECTORS SHALL BE SET SCREW TYPE.

PANELBOARDS

PROVIDE PANELBOARDS AS SCHEDULED ON THE DRAWINGS. PANELS SHALL BE DEAD FRONT ASSEMBLIES, NEMA RATED. PANELS SHALL BE INSTALLED SUCH THAT TOP BREAKER IS NO MORE THAN 78" ABOVE FINISHED FLOOR. PROVIDE A TYPWRITTEN DIRECTORY OF ALL CIRCUITS, TO RELECT THE FINAL, AS CONSTRUCTED CONFIGURATION OF THE PANELS.

PROVIDE COPPER BUS BARS WITH FULLY RATED NEUTRAL BUS. EQUIP ALL PANELS WITH AN EQUIPMENT GROUND BUS.

PROVIDE SHORT CIRCUIT RATINGS TO MEET THE EXPECTED FAULT LEVELS.

EACH PANEL SHALL BE EQUIPPED WITH LOCKING HINGED COVER.

ALL CIRCUIT BREAKERS SHALL BE BOLT ON, THERMOMAGNETIC.

LOW VOTAGE COMMUNICATIONS

PROVIDE A COMPLETE SYSTEM OF OUTLETS AND STATION WIRING AS SHOWN ON THE DRAWINGS AND SPECIFIED HEREIN. ALL STATION WIRING FROM TELEPHONE OUTLETS SHALL BE HOMERUN TO THE BUILDING TELEPHONE BACKBOARD. TELEPHONE OUTLETS SHALL BE SINGLE OUTLET, RJ45 JACK, WITH 1 CAT 5 4PR CABLE FROM THE OUTLET TO THE TEL BACKBOARD.

WIRE AND CABLE

ALL CONDUCTORS SHALL BE COPPER, SIZED ACCORDING TO AMERICAN WIRE GAUGE (AWG). ALL CONDUCTORS #10AWG AND SMALLER SHALL BE SOLID. ALL CONDUCTORS LARGER THAN #10 AWG SHALL BE STRANDED. DO NOT INSTALL CONDUCTORS UNTIL RACEWAY IS COMPLETE, CLEAN, AND FREE FROM OBSTRUCTIONS. PROVIDE A GREEN EQUIPMENT GROUND, SIZED ACCORDING TO THE NEC, IN ALL BRANCH CIRCUIT AND FEEDERS. PROVIDE NAIL PLATES IN ACCORDANCE WITH NEC TO PROVIDE PROTECTION FOR ALL BRANCH CIRCUITS AND FEEDERS. PROVIDE COLOR-CODED CONDUCTORS ACCORDING TO THE FOLLOWING.

PHASE COLOR – 240, 1PH
A BLACK
B RED

NEUTRAL WHITE WITH TRACER
GROUND GREEN/BARE

PROVIDE UNIQUE IDENTIFICATION OF ALL SYSTEM CONDUCTORS PER NEC. IDENTIFICATION METHOD SHALL BE POSTED AT EACH PANELBOARD AND DISTRIBUTION EQUIPMENT LOCATION. CONDUCTORS FROM DIFFERENT SYSTEMS SHALL NOT BE PULLED IN COMMON RACEWAYS.

BRANCH CIRCUIT CONDUCTORS, 40A AND ABOVE: XHHW-2 INSULATION, BLACK OUTER FINISH. PROVIDE COMPRESSION TYPE SPLICES AND TAPS.

NM CABLE BRANCH CIRCUIT CONDUCTORS, 30A AND BELOW: 600V, THHN INSULATION, COLORED OUTER FINISH ACCORDING TO THE CIRCUIT PHASING. PROVIDE INSULATED SPRING TYPE CONNECTORS FOR SPLICES AND TAPS.

FEEDER CONDUCTORS: XHHW-2 INSULATION, BLACK OUTER FINISH. PROVIDE COMPRESSION FITTINGS FOR SPLICES, TAPS, AND LUGS.

WIRING DEVICES AND PLATES

PROVIDE WIRING DEVICES AS INDICATED ON THE DRAWINGS. ALL DEVICES SHALL BE NEW, COMMERCIAL GRADE QUALITY, IVORY FINISH.

RECEPTACLES: NEMA 5-15R, 125V, BACK AND SIDE WIRED, IVORY FINISH FOR ALL GENERAL PURPOSE RECEPTACLES. NEMA 5-20R FOR DEDICATED CIRCUITS. SPLIT SWITCHED AS NOTED ON THE DRAWINGS.

GFCI RECEPTACLES: DUPLEX, 20A, WITH INTEGRAL TEST AND RESET. PROVIDE NEMA 3R WEATHER PROOF COVER ON EXTERIOR RECEPTS.

SWITCHES: 15A, 120/277V, TOGGLE TYPE, SINGLE POLE OR THREE WAY AS INDICATED ON THE DRAWINGS.

PLATES: 306 STAINLESS STEEL, BRUSHED FINISH, GANG AND ORIENTATION AS REQUIRED FOR EACH LOCATION.

DISCONNECTS AND STARTERS

PROVIDE FUSIBLE AND NON-FUSIBLE DISCONNECTS AND STARTERS AS SHOWN ON THE DRAWINGS. PROVIDE ALL CODE REQUIRED DISCONNECTS, WHETHER SPECIFICALLY SHOWN OR NOT. ALL EXTERIOR MOUNTED EQUIPMENT SHALL BE RATED MINIMUM NEMA 3R.

ALL DISCONNECTS SHALL BE HEAVY DUTY TYPE, WITH SWITCH BLADES FULLY VISIBLE IN THE "OFF" POSITION. SWITCHES SHALL BE QUICK MAKE, QUICK BREAK, WITH DEFEATABLE INTERLOCK TO PREVENT UNAUTHORIZED ENTRY WHILE IN THE "ON" POSITION. ENCLOSURE SHALL BE CODE GAUGE STEEL, TREATED WITH RUST INHIBITING PHOSPHATE AND FINISHED IN GRAY, BAKED ENAMEL.

ALL STARTERS SHALL BE HEAVY DUTY CIRCUIT BREAKER TYPE. STARTERS SHALL BE EQUIPPED WITH MAGNETIC STARTER AND HEAVY DUTY CONTACTS. COVER SHALL BE EQUIPPED WITH DEFEATABLE INTERLOCK TO PREVENT UNAUTHORIZED ENTRY WHILE ENERGIZED. ENCLOSURE SHALL BE CODE GAUGE STEEL, TREATED WITH RUST INHIBITING PHOSPHATE AND FINISHED IN GRAY, BAKED ENAMEL.

LIGHTING

PROVIDE A COMPLETE AND OPERATIONAL LIGHTING SYSTEM IN ACCORDANCE WITH THE PROJECT DRAWINGS. PROVIDE ALL LAMPS, BALLASTS, AND ACCESSORIES AS REQUIRED FOR A COMPLETE SYSTEM. REFERENCE THE REFLECTED CEILING PLAN FOR CEILING TYPES AND PROVIDE PLASTER FRAMES AS REQUIRED. PROVIDE SEISMIC BRACING FROM STRUCTURE FOR ALL RECESSED LUMINARES.

INTERIOR FLUORESCENT LUMINAIRES: COLD ROLLED STEEL HOUSING, ELECTRONIC BALLAST, PARABOLIC OR ACRYLIC LENS AS SHOWN IN THE LUMINAIRE SCHEDULE. HOUSINGS SHALL BE EQUIPPED WITH GASKETS AND TRIM TO PREVENT LIGHT LEAKAGE.

INCANDESCENT LUMINAIRES: INTERIOR OR EXTERIOR PER SCHEDULE, MINIMUM 60W RATED LAMP HOLDER FOR A-19 LAMPS. DAMP LABEL FOR ALL EXTERIOR LUMINAIRES.

HIGH INTENSITY DISCHARGE LUMINAIRES: CAST HOUSING WITH POWDER COAT FINISH AND PRISMATIC DIFFUSER.

BALLASTS: FLUORESCENT BALLASTS SHALL BE ELECTRONIC TYPE, HIGH POWER FACTOR, HARMONIC DISTORTION UNDER 10% AND CLASS "A" SOUND RATING. HID BALLASTS SHALL BE COLD WEATHER RATED, HIGH POWER FACTOR, WITH CLASS "A" SOUND RATING.

LAMPS: FLUORESCENT LAMPS SHALL BE T5 OR T8, WATTAGE AND TYPE AS INDICATED ON THE ELECTRICAL DRAWINGS. INCANDESCENT LAMPS SHALL BE 130V, A-19, FROSTED, SUITABLE FOR MOUNTING IN ANY POSITION, WATTAGE AND TYPE AS INDICATED ON THE DRAWINGS. PROVIDE TUBULAR PROTECTION SLEEVES FOR ALL EXPOSED FLUORESCENT LAMPS.

LUMINAIRE SCHEDULE

A LINEAR SUSPENDED FLUORESCENT, 120V, CHAIN MOUNTED, EXTRUDED ALUMINUM HOUSING, 6 T5HO LAMPS PER 48" LENGTH, ELECTRONIC BALLAST AND NIGHT LIGHTING AS INDICATED ON THE DRAWINGS, LITHONIA IBZ SERIES OR APPROVED. 350VA MAX INPUT.

B SURFACE LED WRAP, 120V, 12" X 48", COLD ROLLED STEEL HOUSING WITH PRISMATIC ACRYLIC WRAP LENS, HIGH OUTPUT LED, LITHONIA LBL SERIES OR APPROVED. 55VA MAX INPUT

C EXTERIOR WALL MOUNTED LED, 120V, TRAPEZOIDAL FULL CUIT OFF DIE-CAST ALUMINUM SINGLE PIECE MOUNTING BASE, SINGLE PIECE COVER WITH GLASS LENS, 80WATT LED, WET LOCATION, -20 DEG RATING. SYLVANIA TWP SERIES, 85VA MAX INPUT

D RECESSED LED DOWNLIGHT, 6" APERTURE, SPECULAR REFLECTOR, ACRYLIC TRIM RING, INTEGRAL STEEL JUNCTION BOX, 20 GAUGE COLD ROLLED STEEL HOUSING, ACRYLIC LENS, -20DEG RATING, PRESCOLITE LF6LED5 40K SERIES, 20VA INPUT

F STANCHION MOUNTED LED, 120V, FROSTED GLASS GLOBE WITH ACRYLIC REFLECTOR AND WIRE GUARD, 9" LENGTH BY 3.5" DIAMETER, RIGID STANCHION PROVIDED BY CONTRACTOR, HUBBELL LED V SERIES, TYPE VD-4, 18.7VA MAX INPUT

EX EXIT LUMINAIRE, 120V, THERMOPLASTIC HOUSING, LONG-LIFE LEDS WITH RATED LIFE UP TO 25 YEARS, LESS THAN ONE WATT OF ENERGY CONSUMPTION, FULLY ASSEMBLED SINGLE-FACE EXIT AND REPLACEABLE CHEVRON DIRECTIONAL INDICATOR KNOCKOUTS FOR CHOICE OF DIRECTION, UNIVERSAL MOUNTING, AUTOMATIC RECHARGE AFTER DISCHARGE, TEST SWITCH AND STATUS INDICATOR WITH VISUAL AND MANUAL MEANS OF MONITORING SYSTEM OPERATION, SELF DIAGNOSTIC WITH AUTOMATIC BATTERY TEST ONCE A MONTH FOR FIVE MINUTES AND ONCE EVERY SIX MONTHS FOR 30 MINUTES, INTEGRAL TYPE "EX" EMERGENCY LIGHT, DUALLITE LT SERIES, 15VA MAX INPUT

EMR EMERGENCY WALL PACK REMOTE HEAD, 12VDC, LOW-PROFILE CONTEMPORARY DESIGN WITH HIGH-IMPACT THERMOPLASTIC HOUSING, ONE 5W MR-16 LAMP, CONNECTED TO 12V OUTPUT FROM TYPE "EM" FIXTURE, DUAL LITE LZRSW SERIES, 10VA INPUT.

SYMBOLS (NOTE: NOT ALL SYMBOLS APPEAR ON DWGS)

FLUORESCENT LUMINAIRE
SURFACE LUMINAIRE; WALL PACK OR LINEAR FLUORESCENT
LUMINAIRE CONNECTED TO NIGHT LIGHT CIRCUIT
EMERGENCY WALLPACK: TYPE EM, EMR
EXIT LIGHT; UNIVERSAL MOUNT
$ $3 SWITCH: SINGLE POLE, THREE WAY
RECEPTACLE: DUPLEX, QUAD (PROVIDED GFCI WHERE NOTED ON DWGS)
OS OCCUPANCY SENSOR
TELECOMMUNICATIONS OUTLET
J JUNCTION BOX
MOTOR CONNECTION
DISCONNECT, STARTER
1,3,5. PNL C BRANCH CIRCUIT WIRING
P-1 FEEDER DESIGNATION, SEE FEEDER SCHEDULE
1 SHEET NOTE CALL OUT
200AS 200AF F FUSIBLE DISCONNECT: SWITCH SIZE/FUSE SIZE
BRANCH PANEL: PLAN VIEW
SERVICE CT AND METER: PLAN VIEW

CENTRAL ALASKA ENGINEERING COMPANY, LLC.
32215 LAKEFRONT DR., SOLDOTNA, AK 99669
PHONE (907) 260-5311 FAX (907) 260-5312
E-mail: jherring@akengineer.com

STATE OF ALASKA 49th JOSEPH P. GABRIEL EE-10080 REGISTERED PROFESSIONAL ENGINEER 1/15/2014

NO.	REVISION	DATE

CONSULTING ENGINEERS
STRUCTURAL/CIVIL
155 BIDARKA ST
KENAI, AK 99611
TEL. (907) 283 - 3583
NELSONENGINEER@ALASKA.NET
NELSON ENGINEERING

HOMER FIRE STATION #2 SKYLINE DRIVE
CITY OF HOMER, ALASKA
ELECTRICAL SPECIFICATIONS

PROJECT NO. 1113
DRAWN BY: JPG
CHECKED BY: JPG
DATE: 1/15/2014
SCALES: NOTED
HORIZ. NOTED
VERT. NOTED
SHEET E1.0
1 OF 3

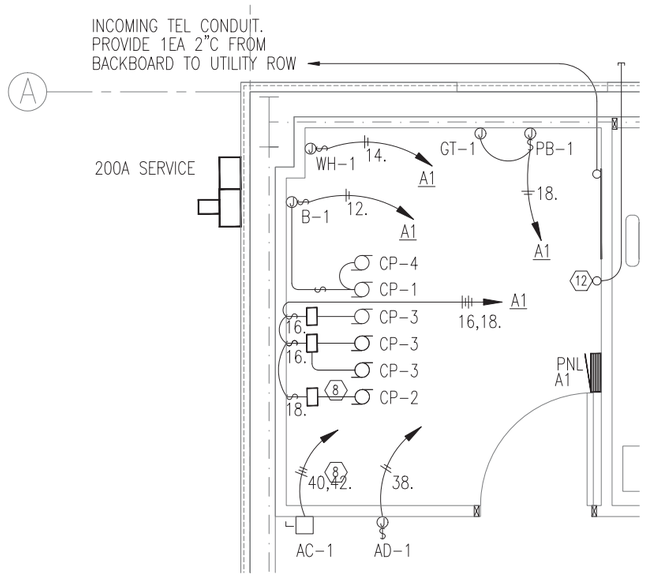

ENLARGED PLAN - MECH

SCALE: 1/4" = 1'-0"

GENERAL NOTES

1. BUILDING IS UNCLASSIFIED PER NEC BASED ON S2 OCCUPANCY.
2. ALL RACEWAYS INSTALLED IN CONCRTE SLAB OR BELOW SLAB SHALL BE PVC WITH GRC ELBOWS. MINMUM RACEWAY SIZE SHALL BE 3/4",
3. ALL BRANCH CIRCUIT RACEWAYS SHALL BE PROVIDED WITH A GREEN EQUIPMENT GROUND CONDUCTOR, SIZED TO MATCH THE LARGEST BRANCH CIRCUIT CONDUCTOR.
4. LIGHTING CIRCUITS SHALL BE #10AWG CONDUCTOR SIZE.
5. BRANCH CIRCUIT ROUTING SHALL BE SQUARE TO BUILDING LINES. PROVIDE ALL REQUIRED CONDUIT, SUPPORTS, CONDUCTORS, JUNCTION BOXES, AND CONNECTIONS AS REQUIRED FOR A COMPLETE AND OPERATIONAL FACILTIY IN ACCORDANCE WITH CODE RULES.
6. ALL WALL MOUNTED DEVICES IN THE STORAGE AREA SHALL BE INSTALLED NO LESS THAN 52" ABOVE FINISHED FLOOR. ALL CONDUIT SHALL BE ROUTED AT MINIMUM 24" ABOVE FINISHED FLOOR.

ELECTRICAL NOTES

(1) SWITCH CONTROL FOR STORAGE AREA LIGHTING PER SWITCH DESIGNATION. TYPICAL.

(2) PROVIDE NIGHT LIGHT CONNECTION FOR ILLUMINATION INDEPENDENT OF SWITCH CONTROL. TYPICAL

(3) PROVIDE CONNECTION FROM INSIDE TYPE EX TO EXTERIOR TYPE EMR PER MFGRS INSTRUCTIONS. TYPICAL.

(4) PROVIDE PHOTOCELL FACING NORTH. INSTALL CIRCUIT FOR CONTROL FROM PHOTOCELL. PROVIDE HOA MANUAL CONTROL STATION IN UTILITY ROOM AND LABEL.

(5) INSTALL ALL STORAGE AREA GFCI RECEPTS AT MIN 48" AFF. TYPICAL.

(6) EXTERIOR RECEPTACLES SHALL BE GFCI TYPE WITH COVER RATED NEMA 3R WHILE IN USE. TYPICAL

(7) PROVIDE 3/4" C – 3#10 AWG CONDUCTORS TO CONNECT EQUIPMENT. COORDINATE EQUIPMENT LOCATION AND CONNECTION DETAILS WITH LIFT STATION INSTALLER.

(8) PUMP CONTROLLERS PROVIDED BY MECHANICAL. COORDINATE LOCATION AND CONNECTION REQUIREMENTS FOR COMPLETE AND OPERATIONAL SYSTEM. PROVIDE LOCKABLE SWITCH COVERS FOR ALL CIRC PUMP SWITCH DISCONNECTS.

(9) INSTALL LIGHTING ABOVE MEZZANINE. TYPICAL 2 TYPE B LUMINAIRES.

(10) PROVIDE CORD REEL MOUNTED TO STRUCTURE WITH SWIVEL EYE, 40 FT TYPE SJ CORD, #12/3 CONDUCTORS, TRIPLE OUTLET, HUBBELL TYPE HBLC40123TT. PROVIDE RECEPTACLE AT STRUCTURE AND MOUNT AND CONNECT PER MFGRS INSTRUCTIONS, TYPICAL.

(11) PROVIDE WALL MOUNTED OCCUPANCY SENSOR CONTROL FOR BATHROOM LIGHTING. OCCUOANCY SENSOR SHALL BE COOPER LIGHTING OSW SERIES OR EQUAL.

(12) MAINTAIN SPACE FOR FUTURE TRANSFER SWITCH. MAINTAIN A 48" WIDTH CLEAR AREA ADJACENT TO PANEL FROM FLOOR TO CEILING. STUB OUT 1-2" CONDUIT AND 1-1" CONDUIT FROM ELECT ROOM 24" BEYOND FOUNDATION FOR FUTURE EMERGENCY ELECTRICAL FEEDER.

(13) PROVIDE STANCHION MOUNTED LIGHT AT TOP OF EXTERIOR ROOF ACCESS LADDER. REFERENCE DETAIL DWG E3.0.

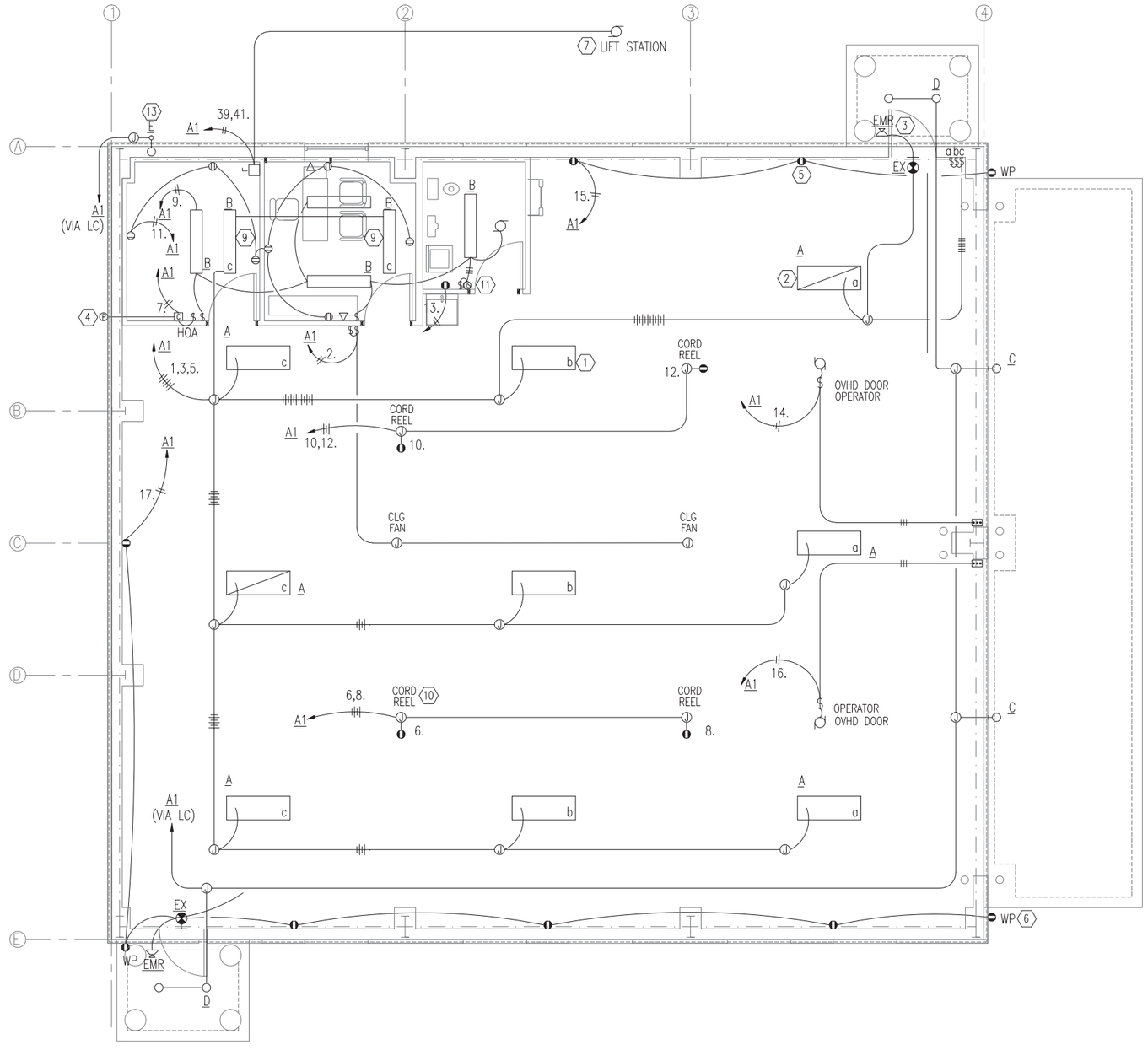

FLOOR PLAN - ELECTRICAL

SCALE: 1/8" = 1'-0"

CENTRAL ALASKA ENGINEERING COMPANY, LLC.
33215 LAKEFRONT DR., SOLDOTNA, AK 99669
PHONE (907) 260-5311 FAX (907) 260-5312
E-mail: jherring@akengineer.com

STATE OF ALASKA 49th JOSEPH P. GABRIEL EE-10080 REGISTERED PROFESSIONAL ENGINEER 1/15/2014

NO.	REVISION	DATE

CONSULTING ENGINEERS
STRUCTURAL/CIVIL
155 BIDARKA ST
KENAI, AK 99611
TEL. (907) 283 - 3583
NELSONENGINEER@ALASKA.NET
NELSON ENGINEERING

HOMER FIRE STATION #2 SKYLINE DRIVE
CITY OF HOMER, ALASKA
ELECTRICAL PLAN

PROJECT NO. 1113
DRAWN BY: JPG
CHECKED BY: JPG
DATE: 1/15/2014
SCALES: NOTED
HORIZ. NOTED
VERT. NOTED
SHEET E2.0
2 OF 3

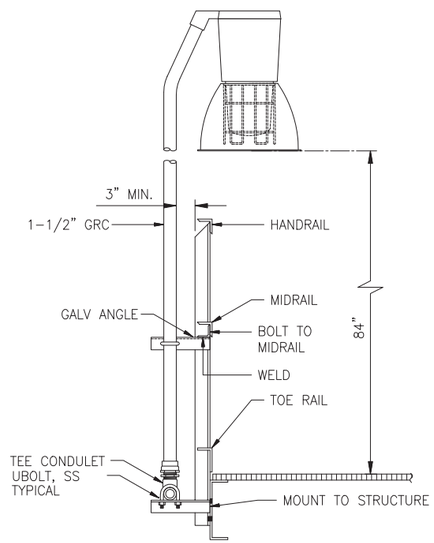

EXTERIOR STANCHION MTD LIGHT

SCALE: NONE

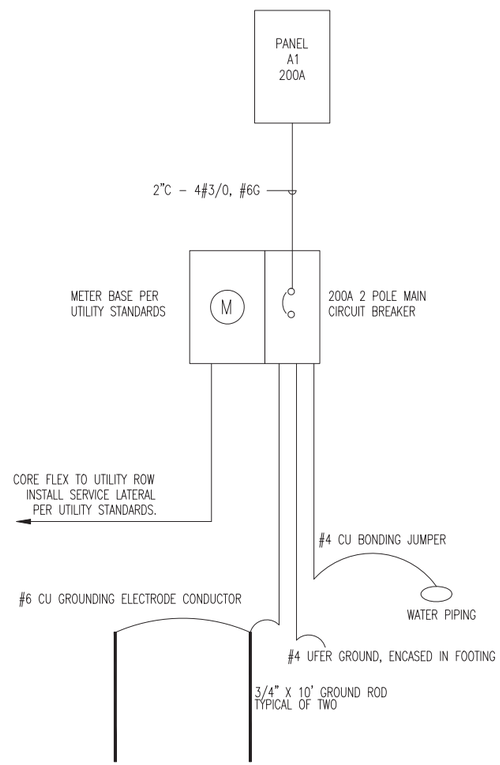

ONE LINE DIAGRAM - 120/240V, 1PH

SCALE: NONE

VOLTS 120/240
HERTZ 60
PHASE 1
WIRE 3

PANEL: A1

225 AMP BUS
--- AMP MAIN CB
YES SOLID NEUTRAL
SURFACE MOUNTING

LOAD DESCRIPTION	BKR SIZE	CKT NO.	BUS A	BUS C	CKT NO.	BKR SIZE	LOAD DESCRIPTION
LTG	20/1	1	●		2	20/1	CLG FANS
LTG	20/1	3			4	20/1	CORD DROP
LTG	20/1	5		●	6	20/1	CORD DROP
EXT LTG	20/1	7	●		8	20/1	CORD DROP
OFFICE/REST LTG	20/1	9			10	20/1	CORD DROP
REST GFCI RECEPT	20/1	11		●	12	20/1	BOILER
STORAGE AREA RECEPTS	20/1	13	●		14	20/1	WATER HEATER
SPARE	20/1	15			16	20/1	ZONE CONTROLS
SPARE	20/1	17		●	18	20/1	PB-1/GT-1
SPARE	20/1	19	●		20	20/1	SPARE
SPARE	20/1	21			22	20/1	SPARE
SPARE	20/1	23		●	24	20/1	SPARE
SPARE	20/1	25	●		26	20/1	SPARE
		27			28		
		29		●	30		
		31	●		32		
		33			34		
	20/2	35		●	36		
	"	37	●		38	20/1	AIR DRYER
LIFT STATION	20/2	39			40	50/2	AIR COMPRESSOR
" "	"	41		●	42	"	" "

LOAD TYPE	LOAD/PHASE (VA) A	LOAD/PHASE (VA) B	CALCULATED LOAD (VA) TOTAL VA	MULT	VA LOAD
HEATING & VENTILATION	---	500	500	1.00	500
EQUIPMENT - NON CONTINUOUS	---	---	---	1.00	---
EQUIPMENT - NON COINCIDENTAL	---	---	---	1.00	---
EQUIPMENT - INTERMITTENT	---	---	---	1.00	---
LIGHTING	2320	1650	3970	1.25	4963
MOTOR LOADS	6160	5660	11820	1.00	11820
OTHER LOADS	3936	3100	7036	1.00	7036
RECEPTACLES	1260	1800	3060	1.00	3060
LOAD TOTALS	13676	12710	26386	1.04	27379
TOTAL CALCULATED VA LOAD (INCLUDES 125% LARGEST MOTOR)					29059
TOTAL AMPERES AT 120/240V					126

PANEL SCHEDULE - NEW STORAGE ADDITION

SCALE: NONE

CENTRAL ALASKA ENGINEERING COMPANY, LLC.
33215 LAKEFRONT DR., SOLDOTNA, AK 99669
PHONE (907) 260-5311 FAX (907) 260-5312
E-mail: jherring@akengineer.com

STATE OF ALASKA 49th JOSEPH P. GABRIEL EE-10080 REGISTERED PROFESSIONAL ENGINEER 1/15/2014

NO.	REVISION	DATE

CONSULTING ENGINEERS
STRUCTURAL/CIVIL
155 BIDARKA ST
KENAI, AK 99611
TEL. (907) 283 - 3583
NELSONENGINEER@ALASKA.NET
NELSON ENGINEERING

HOMER FIRE STATION #2 SKYLINE DRIVE
CITY OF HOMER, ALASKA
ELECTRICAL ONE LINE DIAGRAM

PROJECT NO. 1113
DRAWN BY: JPG
CHECKED BY: JPG
DATE: 1/15/2014
SCALES: NOTED
HORIZ. NOTED
VERT. NOTED
SHEET E3.0
3 OF 3